PID controller

Order number: 900310.030

As of: 27.08.2025 V2.40

Wiring diagram

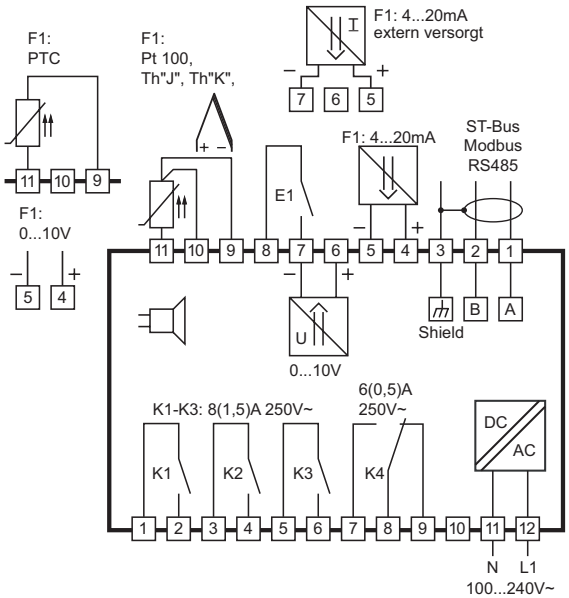

Product description

This microprocessor-based controller is used for temperature control with high measuring accuracy and can be supplied with a voltage of 100 ... 240V AC and.
In addition to resistance sensors and thermocouples, the multi-sensor input can also process 0...10V or 4...20mA. PID control and/or thermostat control can be activated via the parameterisation. Four relay contacts and one analogue output are available as outputs.

The controller is networked by means of an ST-Bus/Modbus interface. The setpoints and parameters are set via a membrane keypad with five keys.

Sensor:	Pt100, Pt1000, TC-J, TC-K, 0-10V, 4-20mA
Range:	dependent on type of sensor
Front size:	84mm x 42mm
Panel cut-out:	67.5mm x 31.5mm
Tightness:	Front IP65
Connection:	plug and socket

© Störk-Tronic 2025 • www.stoerk-tronic.com • Subject to modifications.

Operating keys

Key UP

- Initiate defrost (after 3 sec.)
- Increasing the setpoint
- In the menu: Selection of the next parameter level (C--, b--, etc.) or the next parameter name (C 1, C2, ...)
- In the menu: Increase of the parameter value

Key DOWN

- Switching off the buzzer function (C64)
- Reducing the setpoint
- In the menu: Selection of the previous parameter level (b--, C--, etc.) or the previous parameter name (C2, C 1, ...)
- In the menu: Reduction of the parameter value

Function key 2 (if available)

Standard setting: Setpoint changeover (parameterised according to H32)

- Switching the control on or off
- Setpoint changeover
- Autotuning start of the PID control loop (heating circuit only)
- Coupling to an output relay

Key SET

- Displaying the current setpoint
- In the menu: Confirmation of the selected parameter level or parameter name.
- Together with the 'UP' and 'DOWN' keys, a parameter value or the setpoint (if parameter A60 = 0) can be changed.

If the setpoint is specified by the 0-20mA / 0-10V input (A60 > 0), the setpoint cannot be changed via the keys. The measured setpoint from the voltage or current input is displayed.

Function key 1 (if available)

Standard setting: Standby (parameterised according to H3 1)

- Switching the control on or off
- Setpoint switching
- Autotuning start of the PID control loop (heating circuit only)
- Coupling to an output relay

Control levels:

Parametrisation of the setpoint

The control setpoint C 1 is accessible directly with SET key.
Pressing also the UP or DOWN key it can be adjusted.

The activation of the second setpoint of circuit 1 C2 is indicated on the display with a flashing point to the right. It can either be activated via switching entrance or with a function key (depending on parameter).

Menu levels

By pressing the 'UP' and 'DOWN' keys simultaneously for at least 4 seconds, the controller changes to the menu level. This consists of several submenus, which are marked by the respective initial letter followed by 2 dashes (e.g. C– for the C-level).

	Menu	Function
C--	Controller level	Application parameters
b--	Between level	Linking parameters
H--	Hardware level	Hardware parameters
L--	Modbus level	Modbus parameters
d--	Defrost level	Defrosting parameters
A--	Analogue level	Parameter for analogue in- and outputs

Modbus level

Please note: The Modbus level can only be accessed on the controller by pressing the UP, DOWN, and STANDBY buttons simultaneously!

Adjustment of control parameters

The submenu is selected by pressing the 'UP' or 'DOWN' key. If you press the 'SET' key, the password for the respective level is requested. This must be set accordingly by additionally pressing the 'UP' or 'DOWN' key.
(Default value: 0 = deactivated).

The last parameter of the respective submenu (e.g. C99, b99, ...) corresponds to the current password of this level and can be changed there.

After releasing the 'SET' key, if the password is entered correctly, the display jumps to the submenu and shows the first parameter of the list there. If you press the 'SET' key, the value of the selected parameter is displayed. It can be adjusted by pressing the 'UP' or the 'DOWN' key. After releasing all keys, the new value is permanently stored.

If the 'UP' and 'DOWN' keys are pressed again simultaneously for at least 4 seconds, the display changes back to the menu level. If you press the 'UP' and 'DOWN' keys again for at least 4 seconds or if no key is pressed for more than 60 seconds, the display returns to the basic status.

Software version

The software version number can be called up by pressing the 'SET' + 'UP' + 'DOWN' key simultaneously.

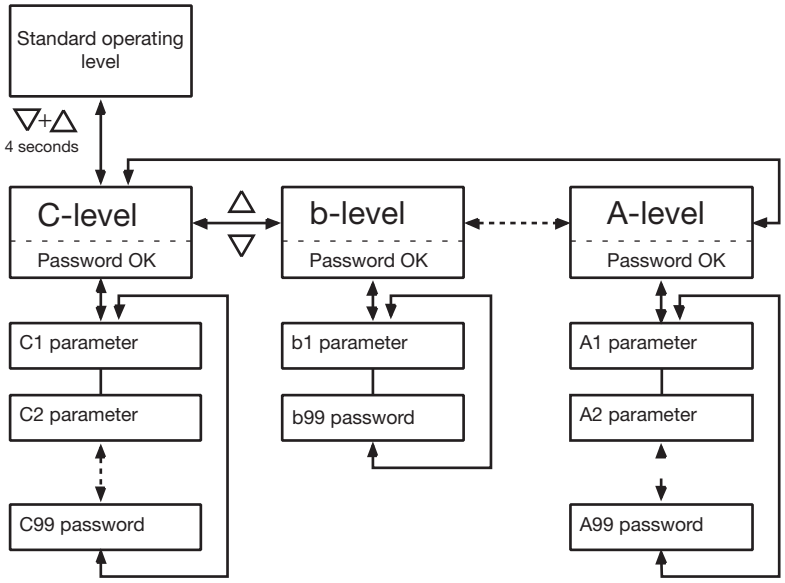

© Störk-Tronic 2025 • www.stoerk-tronic.com • Subject to modifications.

The C-level (controller)

This level contains the application parameters.

Thermostat 1

Parameter	Function	Adjustment range	Standard value	Custom value
C1	Setpoint control circuit 1	C10...C11	0.0 °C	
C2	Setpoint control circuit 1 (*)	C10...C11	0.0 °C	
C3	Offset for C1/C2	-99.0 ... 99.0°K	0.0 K	
C4	Switching sense control circuit 1	0: heating function 1: cooling function	0	
C5	Hysteresis control circuit 1	0.1 ... 99.9°K	1.0 K	
C6	Hysteresis mode control circuit 1	0: symmetrical 1: one-sided	0	
C7	Minimum action time control circuit 1 ”ON”	0 ... 400 sec.	0 sec.	
C8	Minimum action time control circuit 1 ”OFF”	0 ... 400 sec.	0 sec.	
C9	Function control circuit 1 at sensor error	0: relay off 1: relay on	0	
C10	Max. control range limitation, setpoint 1	-99.0°C ... C11	-99.0 °C	
C11	Min. control range limitation, setpoint 1	C10 ... 999.0°C	999 °C	

* The activation of the second setpoint C2 is indicated on the display with a flashing point to the right. It can be activated either via the switching input or via function key 1 or 2. (depending on parameter H31 or H32).
See also the chapter Notes on setpoint changeover.

Thermostat 2

Parameter	Function	Adjustment range	Standard value	Custom value
C21	Setpoint control circuit 2 (b1=0)	C30...C31	0.0 °C	
C23	Offset for C1/C21 (b1=1)	-99.0 ... 99.0°K	0.0 K	
C24	Switching sense control circuit 2	0: heating function 1: cooling function	1	
C25	Hysteresis control circuit 2	0.1 ... 99.9°K	1.0 K	
C26	Hysteresis mode control circuit 2	0: symmetrical 1: one-sided	0	
C27	Minimum action time control circuit 2 ”ON”	0 ... 400 sec.	0 sec.	
C28	Minimum action time control circuit 2 ”OFF”	0 ... 400 sec.	0 sec.	
C29	Function control circuit 2 at sensor error	0: relay off 1: relay on	0	
C30	Max. control range limitation, setpoint 2	-99.0°C ... C31	-99.0 °C	
C31	Min. control range limitation, setpoint 2	C30 ... 999.0°C	999 °C	
Thermostat 3				
C41	Setpoint control circuit 3 (b2=0)	C50...C51	0.0 °C	
C43	Offset for C1/C41 (b2=1)	-99.0 ... 99.0°K	0.0 K	
C44	Switching sense control circuit 3	0: heating function 1: cooling function	1	
C45	Hysteresis control circuit 3	0.1 ... 99.9°K	1.0 K	
C46	Hysteresis mode control circuit 3	0: symmetrical 1: one-sided	0	
C47	Minimum action time control circuit 3 ”ON”	0 ... 400 sec.	0 sec.	
C48	Minimum action time control circuit 3 ”OFF”	0 ... 400 sec.	0 sec.	
C49	Function control circuit 3 at sensor error	0: relay off 1: relay on	0	
C50	Max. control range limitation, setpoint 3	-99.0°C ... C51	-99.0 °C	

© Störk-Tronic 2025 • www.stoerk-tronic.com • Subject to modifications.

Parameter	Function	Adjustment range	Standard value	Custom value
C51	Min. control range limitation, setpoint 3	C50 ... 999.0°C	999 °C	
Boundary or range alarm				
C61	Lower alarm value	-99.0 ... C62 °C	-10.0 °C	
C62	Upper alarm value	C61 ... 999.0 °C	10.0 °C	
C63	Alarm functions	0: Boundary alarm, relative boundaries 1: Boundary alarm, absolute boundaries 2: Range alarm, relative boundaries 3: Range alarm, absolute boundaries 4: Boundary alarm, relative boundaries, alarm inverse 5: Boundary alarm, absolute boundaries, alarm inverse 6: Range alarm, relative boundaries, alarm inverse 7: Range alarm, absolute boundaries, alarm inverse	0	
C64	Special function at boundary alarm	0: not active 1: flashing display 2: buzzer 3: buzzer + flashing display 4: like 3, buzzer can be cancelled 5: like 4, restarts after 10 min. 6: like 4, restarts after 30 min	4	
C65	Hysteresis alarm circuit	0.1 ... 99.9 K	1 K	
PID controller				
C82	Proportional area at PID control	0.1 ... 999.0°K	10 K	
C83	Reset time at PID control (I-portion)	0...999 sec., 0: inactive	600 s	
C84	Lead time at PID control (D-portion)	0...999 sec., 0: inactive	0 s	
C85	Cycle time at PID control	2...100 sec.	8 s	
C86	Control variable dead volume	0.0 ... 100.0%	0,0 %	
C87	Function PID control circuit at sensor error	-100.0% ... 0 ... 100.0%	0,0 %	
C88	PID-mode	0: PID 1: DiffPID (2 relays – heating, cooling) 2: PID with dead volume at analogue exit	0	
C89	Cycle time motor valve (Differential PID)	2...100 sec.	8 s	
C90	Anti-Windup, lower limit for P+I portion	-100 ... 100 %	-100	
C91	Anti-Windup, upper limit for P+I portion	-100 ... 100 %	100	
Password				
C99	Password C level	-99...999	0	

b-level (between)

This level contains the parameters for different combinations.

Parameter	Function	Adjustment range	Standard value	Custom value
b1	Activation setpoint combination for thermostat 1 and 2 (C23 = deltaW2)	0: no combination 1: Setpoint thermostat 2 = C1/C2 + C23	0	
b2	Activation setpoint combination for thermostat 1 and 3 (C43 = deltaW3)	0: no combination 1: setpoint thermostat 3 = C1/C2 + C33	0	
b11	Delay control circuit 1, 2, 3 after “Power-On”	0...400 sec.	0 sec.	
b12	Mutual delay control circuit 1, 2, 3	0...400 sec.	0 sec.	
b13	Alarm suppression after “Power-On”, “setpoint”	0...60 min.	20 min.	
b21	Linking analogue exit	0: actuating variable 1: actual value 2: setpoint	0	
b99	Password b-level	-99 ... 999	0	

© Störk-Tronic 2025 • www.stoerk-tronic.com • Subject to modifications.

H level (Hardware)

This level contains the hardware parameters.

Parameter	Function	Adjustment range	Standard value	Custom value
H 1	Key-lock	0: no key-lock 1: key-lock	0	
H 11	Indication mode display 1	0: integrals 1: decimals in 0.5°K 2: decimals in 0.1°K 3: decimals in 0.01°K	2	
H 12	Display mode	1: actual value 2: setpoint 3: PID control variable	1	
H 15	Temperature scale	0: Celsius 1: Fahrenheit	0	
H 16	Indication standby	0: no display (point to the right) 1: AUS 2: OFF	1	
H 17	Mode following "Power-On" “	0: Off 1: On 2: Auto	1	
H31	Assigning function key 1	0: no function 1: Controller on/off (standby) 2: Setpoint 1 / Setpoint 2 3: Start autotuning 4: Relay (H41 ... H44 = 7), off on Standby 5: Relay (H41 ... H44 = 7), independent of Standby	1	
H32	Assigning function key 2	0: no function 1: Controller on/off (standby) 2: Setpoint 1 / Setpoint 2 3: Start autotuning 4: Relay (H41 ... H44 = 8), off on Standby 5: Relay (H41 ... H44 = 8), independent of Standby	2	
H33	Assigning switching input E1	0: no function 1: Controller on/off (standby) 2: C1/C2 3: Relay (H41 ... H44 = 9), off on Standby 4: Relay (H41 ... H44 = 9), independent of Standby	2	
H35	Activation of key acknowledgement	0: no key acknowledgement 1: key acknowledgement with buzzer	0	
H41	Function output K1	0: no connection 1: thermostat 1 2: thermostat 2 3: thermostat 3 4: alarm function 5: PID heating 6: PID cooling 7: Function key 1 (H31 >= 4) 8: Function key 2 (H32 >= 4) 9: Function switching input (H33 >=3)	5	
H42	Function output K2	see H41	0	
H43	Function output K3	see H41	0	
H44	Function output K4	see H41	0	
H51	Mains frequency	0: 50Hz 1: 60Hz	0	
LO	ST-Bus address	1 ... 250	5	
H99	Password H level	-99..999	0	

© Störk-Tronic 2025 • www.stoerk-tronic.com • Subject to modifications.

L-level (Networking and display)

This level contains, among other things, the parameters for the Modbus.

This level can be accessed by pressing the UP, DOWN, and STANDBY buttons simultaneously.

Parameter	Function	Setting range	Standard value	Custom value
d2	Parameter reset	1: Reset control parameters 8: Factory (incl. passwords)	-	
L4	Display value	See actual values table	0	
L5	Program version	-		
L 10	Bus protocol	0: ST-Bus 1: Modbus, rtu 11 bit (8 data bits) 2: Modbus, ascii 10 bit (7 data bits)	0	
L 11	Modbus Baudrate	0: 115200 1: 57600 2: 38400 3: 19200 4: 9600 5: 4800	4	
L 12	Modbus Parity	0: none 1: odd 2: even	2	
L 13	Own address (Slave)	0: address like ST-Bus (see L0) 1 ... 250	5	
L99	Password of parameter level L--	-99 ... 999	-19	

d-level (defrosting functions)

This level contains the parameters for defrosting.

NOTE: Defrosting parameter only affects control circuit 1

Parameter	Function	Adjustment range	Standard value	Custom value
d0	Defrosting interval TH1	1 ... 99h 0: no defrosting	0	
d2	Defrosting temperature TH1	-99.0 ... 999.0°C	10,0 °C	
d3	Defrosting time limit TH1	1 ... 99 min. 0: no time limit	30 min	
d9	Manual defrosting TH1	0...1	0	
d99	Password d-level	-99...999	0	

© Störk-Tronic 2025 • www.stoerk-tronic.com • Subject to modifications.

Die A-level (analogue values)

This level contains the parameters for analogue inputs and outputs

Parameter	Function	Adjustment range	Standard value	Custom value
A1	Actual value	-		
A2	Actual value correction thermocouple/temperature sensor (does not apply to current/voltage input)	-99.0 ... 99.9 °K	0 K	
A3	Weighing factor	0.50 ... 1.50	1.00	
A4	Sensor type	1: Thermocouple type J 2: Thermocouple type K 11: Pt100 two-wire 12: Pt100 three-wire 13: Pt1000 two-wire 14: Pt1000 three-wire 21: KTY81-121 two-wire 31: Voltage input 0 ... 10 V 32: Voltage input 2 ... 10 V 41: Current input 0 ... 20 mA (sink) 42: Current input 4 ... 20 mA (sink) 43: Current input 0 ... 20 mA (source) 44: Current input 4 ... 20 mA (source) 50: Quantity counting	12	
A5	Display value for lower value of U/I analogue input	-99.0 ... 999	0.0	
A6	Display value for upper value of U/I analogue input	-99.0 ... 999	100.0	
A7	Quantity counting scaling	1 ... 9999 pulses/unit of measure	1000	
A8	Display type of the quantity counting	0: Pulses / sec. (= frequency) 1: Quantity / sec. 2: Quantity / min.	0	
A9	Units for measured values, setpoints and parameters	0: without unit 1: counter 2: °C 3: bar 4: Pa 5: %rH 6: % 7: l/min 8: l/h	2	
A40	Time constant of the software filter X = 160 ms (50 Hz, H51 = 0) X = 400 ms (60 Hz, H51 = 1)	0: not active, otherwise average value over 1: 2 measured values (approx. 2*X s) 2: 4 measured values (approx. 4*X s) 3: 8 measured values (approx. 8*X s) 4: 16 measured values (approx. 16*X s) 5: 32 measured values (approx. 32*X s) 6: 64 measured values (approx. 64*X s)	2	
A50	Display of the PID control variable	-		
A51	Display value for lower value at analogue output (0V/0mA)	-99,0 ... (A52 - 0,5) 0 at sensor error (b21 = 1)	0.0	
A52	Display value for upper value at analogue output (10V/20mA)	(A51 + 0,5) ... 999	100	
A53	Output value full cooling power (-100.0..0%)	0 ... 10.0 (10 corresponds to 10 V or 20 mA)	0.0	
A54	Output value “0” power	0 ... 10.0 (10 corresponds to 10 V or 20 mA)	0.0	
A55	Output value full heating power (0..100.0%)	0 ... 10.0 (10 corresponds to 10 V or 20 mA)	10.0	
A60	Type of setpoint sensor	0: Fixed value from parameter memory (C1) 31: Voltage input 0 ... 10 V 32: Voltage input 2 ... 10 V 41: Current input 0 ... 20 mA (sink) 42: Current input 4 ... 20 mA (sink) 43: Current input 0 ... 20 mA (source) 44: Current input 4 ... 20 mA (source)	0	
A99	Password A-level	-99 ... 999	0	

© Störk-Tronic 2025 • www.stoerk-tronic.com • Subject to modifications.

Notes on setpoint changeover

Shortcut for setpoint setting via the voltage / current input = „analogue“.

Switching between the two setpoints C1 (A60 = 0) or setpoint setting via the analogue input (A60 > 0) and C2 can be done via the switching input E1 as well as via the function keys **F1** or **F2**.

The following rules apply:

• A setpoint C1/analogue to C2 switched by a function key can be switched back (C1/analogue) by pressing another function key. The function keys must be configured for setpoint switching by the parameters H31 = 2 (**F1**) or H32 = 2 (**F2**).

• The switching input can also switch between the setpoints by closing and opening the switching contact.

• By opening the contact, the switching input E1 is able to switch back a setpoint (C1/analogue to C2) that has been switched by a function key. It acts like an additional function key.

• Conversely, this can also be done by a function key. A setpoint switched by the switching input can be switched back again by **F1** or **F2**.

Important:
In the event of a power failure and standby operation, the last set status is saved.

C-level:

C1: Setpoint control circuit 1
This value corresponds with the setpoint set at the first control level.

Important: For C1 to be used, parameter A60 must be = 0. Otherwise, the applied voltage (pins 4/5) or current (pins 4/5 or 5/7) is used as the setpoint.

C2: Setpoint control circuit 1 at closed switching input
Setpoint C2 can only be called up via the ‘SET’ key if input E1 is closed or one of the function keys **F1** or **F2** has been pressed (see also the chapter Notes on setpoint switching).
If the quantity counting function (50) was set via the sensor selection (parameter A4), then the switchover via input E1 is deactivated.

C3: Offset for C1/C2
This adjusted value will build the difference to the setpoint for control circuit 1, i.e. there is no regulation according to the pre-set value, but according to the sum of desired value and the value of C3.

C4: Switching sense control circuit 1
The switching sense for the relays, i.e. cooling or heating function, can be programmed independently. Heating function means that the contact falls as soon as the pre-set setpoint is reached, thus power interruption. At cooling function, the contact only tightens, if the actual value is above the required setpoint.

C5: Hysteresis control circuit 1
The hysteresis can be set symmetrically or one-sided at the desired value (see C6). At one-sided setting, the hysteresis works downward with heating contact and upward with cooling contact. At symmetrical hysteresis, half of the hysteresis’ value is effective below and half of the value above the switching point.

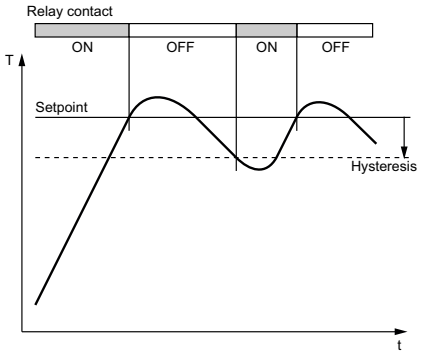

Heating controller, one-sided hysteresis

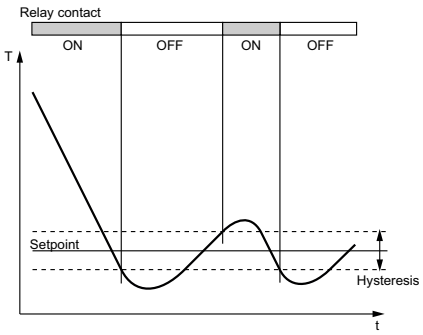

Cooling controller, one-sided hysteresis

C6: Hysteresis mode control circuit 1
These parameters allow selection as to whether the hysteresis values which are adjustable with C5, are set symmetrically or one-sided at the respective switching point. At symmetrical hysteresis, half of the hysteresis’ value is effective below and half of the value above the switching point. The one-sided hysteresis works downward with heating contact and upward with cooling contact.

C7/C8: Minimum action time control circuit 1 “On”/”Off”
These parameters permit a delay in switching on/off the relay in order to reduce the switching frequency. The adjusted time sets the entire minimum time period for a switching-on or switching-off phase

C9: Function circuit 1 at sensor error
At sensor error the selected relay (see H41 ... H44) falls back into the condition pre-set here.

C10: Setpoint limit (min) setpoint 1
C11: Setpoint limit (max) setpoint 1
The adjustment range of the setpoint can be limited in both directions. This is to prevent the end user of a unit from setting inadmissible or dangerous setpoints.

C21: Setpoint control circuit 2 (thermostat) (b1=0)
If b1=1, this value is ineffective.

C23: Value deltaW2 (b1=1)
If b1=1, the setpoints for control circuit 1 and 2 are linked with one another via switching difference deltaW2 (operation with deltaW).
The following applies: Setpoint thermostat 2 = setpoint control circuit 1 (C1/C2) + deltaW2.
This difference can take positive or negative values. Thus, a leading or following contact can be realised.

C24: Switching sense control circuit 2
The switching sense for the relays, i.e. cooling or heating function, can be programmed independently at works. Heating function means that the contact falls as soon as the pre-set setpoint is reached, thus power interruption. At cooling function, the contact only tightens, when the actual value is above the required setpoint.

C25: Hysteresis control circuit 2
The hysteresis can be set symmetrically or one-sided at the setpoint (see C26). At one-sided setting, the hysteresis works downward with heating contact and upward with cooling contact. At symmetrical hysteresis, half of the hysteresis’ value is effective below and half of the value above the switching point.

C26: Hysteresis mode control circuit 2
These parameters allow selection as to whether the hysteresis values which are adjustable with C25, are set symmetrically or one-sided at the respective switching point.
At symmetrical hysteresis, half of the hysteresis’ value is effective below and half of the value above the switching point. The one-sided hysteresis works downward with heating contact and upward with cooling contact.

C27: Minimum action time control circuit 2 “On”
C28: Minimum action time control circuit 2 “Off”
These parameters permit a delay in switching on/off the relay, in order to reduce the switching frequency. The adjusted time sets the entire minimum time period for a switching-on or switching-off phase.

© Störk-Tronic 2025 • www.stoerk-tronic.com • Subject to modifications.

C29: Function control circuit 2 at sensor error
At sensor error the selected relay (see H41, H42) falls back into the condition pre-set here.

C30: Setpoint limit (min) setpoint 2
C31: Setpoint limit (max) setpoint 2
The adjustment range of the setpoint can be limited in both directions. This is to prevent the end user of a unit from setting inadmissible or dangerous setpoints.

C41: Setpoint thermostat 3 (b2=0)
If b2=1, this value is ineffective.

C43: Value deltaW3 (b2=1)
If b2=1, the setpoints for control circuit 1 and 2 are linked with one another via switching difference deltaW3 (operation with deltaW).
The following applies: Setpoint thermostat 3 = setpoint control circuit 1 (C1/C2) + deltaW3.
This difference can take positive or negative values. Thus, a leading or following contact can be realised.

C44: Switching sense control circuit 3
The switching sense for the relays, i.e. cooling or heating function, can be programmed independently at works. Heating function means that the contact falls as soon as the pre-set setpoint is reached, thus power interruption. At cooling function, the contact only tightens, when the actual value is above the required setpoint.

C45: Hysteresis control circuit 3
The hysteresis can be set symmetrically or one-sided at the setpoint (see C46). At one-sided setting, the hysteresis works downward with heating contact and upward with cooling contact. At symmetrical hysteresis, half of the hysteresis' value is effective below and half of the value above the switching point.

C46: Hysteresis mode control circuit 3
These parameters allow selection as to whether the hysteresis values which are adjustable with C45, are set symmetrically or one-sided at the respective switching point. At symmetrical hysteresis, half of the hysteresis' value is effective below and half of the value above the switching point. The one-sided hysteresis works downward with heating contact and upward with cooling contact.

C47: Minimum action time control circuit 2 "On"
C48: Minimum action time control circuit 2 "Off"
These parameters permit a delay in switching on/off the relay, in order to reduce the switching frequency. The adjusted time sets the entire minimum time period for a switching-on or switching-off phase.

C49: Function control circuit 3 at sensor error
At sensor error the selected relay (see H41, H42) falls back into the condition pre-set here.

C50: Setpoint limit (min) setpoint 3
C51: Setpoint limit (max) setpoint 3
The adjustment range of the setpoint can be limited in both directions. This is to prevent the end user of a unit from setting inadmissible or dangerous setpoints.

C61: Lower alarm value
C62: Upper alarm value
The exit alarm is a boundary alarm or a range alarm with one-sided hysteresis (see parameter C65). Both at the boundary alarm and the range alarm, limit values can be relative, i.e. going along with the setpoint C1/C2, or absolute, i.e. independent of the setpoint C1/C2. At boundary alarm the hysteresis works one-sided inwardly, and at range alarm outwardly (see pictures).

C63: Function exit alarm
The exit alarm evaluates an upper and a lower limit value (see parameters C61 and C62), whereas a selection is possible as to whether the alarm is active if the temperature lies within these two limits, or whether the alarm is released if the temperature lies beyond them. In the case of sensor error, the alarm is activated independently of this adjustment. The exit can also be inverted, so that it functions like a release (see pictures).

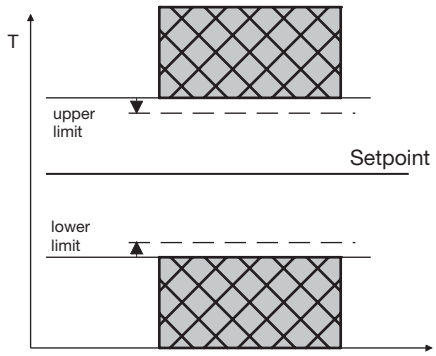

Boundary alarm, alarm contact normal:
C63=0 limits relative, C63=1 limits absolute

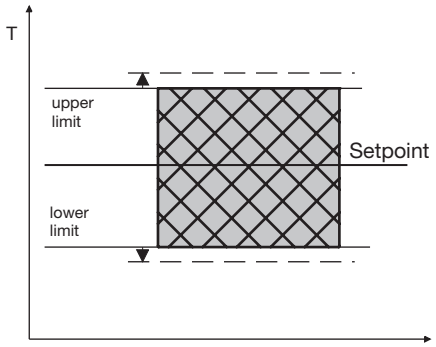

Range alarm, alarm contact normal:
C63=2 limits relative, C63=3 limits absolute

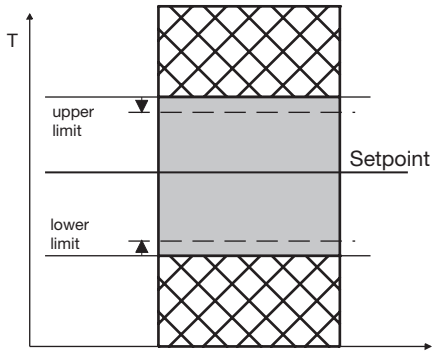

Boundary alarm, alarm contact inverse:
C63=4 limits relative, C63=5 limits absolute

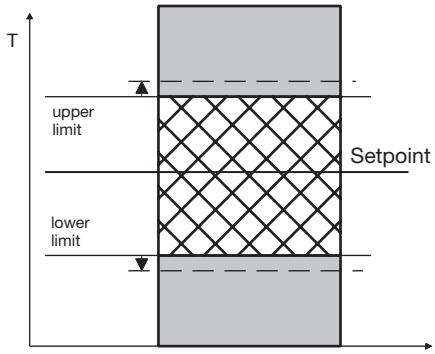

Range alarm, alarm contact inverse:
C63=6 limits relative, C63=7 limits absolute

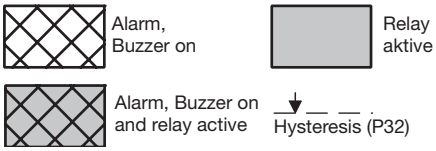

C64: Special function at alarm
Here can be selected whether, in the case of emergency, the indication to flash and/or the buzzer is to start. Sensor alarm (display F1L or F1H) is indicated independently thereof by flashing display and the buzzer runs off.

A sensor alarm (display F1L, F1H or FSL, FSH) is indicated independently by a flashing display and the buzzer sounds. The buzzer can be switched off at any time by pressing the 'DOWN' key. The buzzer is switched on again after 10 minutes if the error is still present.

C65: Hysteresis alarm circuit
Hysteresis is set one-sided at the adjusted limit value. It becomes effective depending on alarm definition.

© Störk-Tronic 2025 • www.stoerk-tronic.com • Subject to modifications.

PID - control

C82: Proportional band at PID regulation
The proportional band works in such a way that with approximation of the actual value to the setpoint the variable is reduced linearly from +-100% to 0%.

C83: Reset time at PID regulation (I-portion)
C84: Lead time at PID regulation (D-portion)
The proportional controller as such has a remaining deviation of the actual value from the setpoint. The integral portion provides for a complete compensation of this offset.
The reset time is a measure for the period of time needed to adjust a remaining temperature deviation of the size of the proportional range.
If a small reset time is set, a fast post-adjustment will take place. At a too small reset time, however, the system may tend to vibrate.
The differential portion dampens temperature changes.
If lead time is set for long, damping is strong. At too long lead time, however, the system may tend to vibrate. At setting 0 the values are ineffective. It is therefore possible to realise a pure PI or PD regulation.

C85: Cycle time at PID regulation
During the cycle time the control exit runs through one switching period, i.e. once switched out and once switched on. The smaller the cycle time, the faster the regulation. By consequence, however, there is also an increased switching frequency of the output, which can lead to rapid wear of relay contacts. For very fast control ways with the respective high switching frequency a voltage output is therefore of advantage.

C86: Control variable dead volume

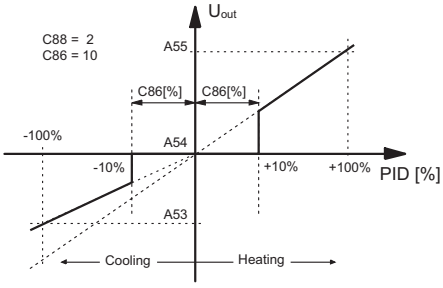

With parameter C86, the size of the dead volume can be set in % of the PID control value. This function is usually used with clocked PID controllers (relays) to achieve a minimum switch-on time. With C88 = 1 (differential PID), a pseudo hysteresis can be realised. This leads to a reduction in the switching frequency, provided the actual value is approximately equal to the setpoint. For C88 = 2, the dead volume is also made available at the analogue output.

C87: Function PID control circuit at sensor error
In the case a sensor error, the PID variable automatically goes to the condition set here.

C88: PID-Mode
[C88 = 0] PID standard
[C88 = 1] PID differential (see below)
[C88 = 2] PID standard with dead volume at analogue exit
PID differential: The differential mode is particularly suitable for the use of control valves (e.g. K1=OPEN, K2=CLOSED). As long as the value computed by the PID circuit remains constant, both exits remain inactive, i.e. the valve stops at the current position.

	PID Standard (C88 = 0/2)		
	PID	K1: Heating	K2: Cooling
1	20 %	20 %	0 %
2	25 %	25 %	0 %
3	25 %	25 %	0 %
4	10 %	10 %	0 %
5	-20 %	0 %	20 %

	PID Differential (C88 = 1)		
	PID	K1: Heating	K2: Cooling
1	+20 %	20 %	0 %
2	+5 %	5 %	0 %
3	±0 %	0 %	0 %
4	-15 %	0 %	15 %
5	-30 %	0 %	30 %

Thus, control valves almost show the same controlling results as analogue valves. The table shows the different behaviour of both modes within the same control system.

C89: Cycle time control valve (DiffPID)
This parameter sets the time the control valve needs to go from 0% to 100%.
If C88=1, the PID variable is converted to this interval. The PID cycle time (C85) remains unaffected by this. When this time is defined, indication with a rounded up value in seconds is recommended.
Furthermore C85 should be > = C89.
At ± 100% the respective exit remains durably active (synchronisation).

C99: Password
This parameter is to set the password for the C-- level.

b-level

b1: Activation setpoint combination for thermostat 1 and thermostat 2 (deltaW2)
This parameter determines whether the setpoints for thermostat 1 and 2 independently adjustable (parameter C21) or whether they are tied with one another via a switching offset deltaW2 (parameter C23).

b2: Activation setpoint combination for thermostat 1 and thermostat 3 (deltaW3)
This parameter determines whether the setpoints for thermostat 1 and 3 independently adjustable (parameter C41) or whether they are tied with one another via a switching offset deltaW2 (parameter C43).

b11: Delay control circuit 1, 2, 3 after "Power-On"
This parameter allows a switching-on delay of relays after switching-on the mains voltage. This delay corresponds with the time set here.

b12: Mutual delay control circuit 1, 2, 3
This parameter makes a mutual switching-on delay of relays possible, depending on whichever contact is switched first.

b13: Alarm suppression after "Power-On", "setpoint"
This parameter allows a switching-on delay of the alarm contact after switching on the mains voltage. This delay corresponds with the time set here.

b99: Password
This parameter is to set the password for the b–level.

Autotuning of PID heating circuit:

Autotuning is intended to adapt and optimise the control behaviour to the controlled system. The following must be observed:
- Autotuning can be initiated via function key **F1** or **F2**. To do this, set parameters H31 or H32 to 3.
- Autotuning only affects one heating circuit. Before the tuning process, at least one output relay (K1 ... K4) must be set to heating (= 5) via parameters H41 ... H44.
- The setpoint must be at least 20 K higher than the actual value. Otherwise "---" is displayed (for 2 sec.) and autotuning is not started.
- After initiating the tuning process until its end, the display alternates between the normal display value (e.g. actual value) and 'Auto' (can take 1 hour or more). Afterwards, the measured value display returns to normal.
- The tuning process changes parameters C82 ... C85.
- After a power failure or switching to standby mode before the end of tuning makes it necessary to restart the tuning process. The above parameters have been changed by its start.
- Changing the setpoint also requires a restart of the tuning process.
- It may be necessary to readjust the above parameters C82 ... C85 by hand even after an auto-tuning has been carried out.

© Störk-Tronic 2025 • www.stoerk-tronic.com • Subject to modifications.

H-level

H 1: Key-lock
The key-lock allows blocking of the control keys. In locked condition parameter adjustments with keys is not possible. At the attempt to adjust the parameters despite key-lock the message "---" appears in the display.

H 11: Indication mode display
If the range is exceeded, the system automatically switches to the next lower resolution level (e.g. 99.99 °C -> 100.0 °C or -99.9 °C -> -100 °C).
Parameter settings and setpoints are always displayed with a resolution of 0.1 °C.

H 12: Display mode
If the setpoint or the PID control value is selected instead of the actual value, the current actual value can only be displayed via parameter A 1. Conversely, if the actual value is displayed, the PID control value can only be called up via A50.

H 15: Temperature scale
The display can be switched between Fahrenheit and Celsius. This is only a different type of display. Within the controller, the calculation is still done in °C.
(Example: 100 °C is displayed as 212 °F).
ATTENTION: Display limits for °F can be smaller than the actual measuring range!

H 16: Indication standby
In standby mode the here set value appears in the display.

H 17: Mode following "Power-On"
0: OFF, the controller is immediately switched to standby mode.
1: ON, the controller is switched on normally.
2: AUTO, depending on the operating state before disconnection from the mains, the controller is moved to the last set state.

H31/H32: Assigning function key 1/2
0: The key is deactivated
1: Standby button. The controller can be switched on or off.
2: Switching between setpoint 1 (C 1) and setpoint 2 (C2), see also the chapter Notes on setpoint changeover.
3: Initiate PID autotuning to optimise the PID control behaviour.
See also the chapter Autotuning of the PID heating circuit.
4: Assignment of a relay H41...H44
After mains interruption, the relay is off.
5: Assignment of a relay H41...H44
After mains interruption, the state remains stored.

Exceptions:
- Autotuning must be restarted
- A possibly switched on relay must be switched again.

H33: Function switching input E1
0: E1 deactivated
1: Standby, controller can be switched on or off.
2: Toggle setpoint 1 (C 1) and 2 (C2).
3: Assignment of a relay (H41...H44 = 9).
After mains interruption, the relay is off.
4: Assignment of a relay (H41...H44 = 9)
After mains interruption, the state remains stored.

H35: Key acknowledgement
This parameter permits to switch the internal buzzer on/off by key confirmation.

H41 ... H44: Function output K1 ... K4

H5 1: Mains frequency
This parameter is to select the mains frequency.

L0: Bus adress
Setting the ST-Bus address for connection to higher-level control instances.

H99: Password
This parameter is to adjust the password for the H—level

L level (PAL):

J2 Parameter reset
With J2=1, the parameters of the current parameter set (see J1) can be reset to factory settings.
With J2=8, the controller is reset to factory settings (including passwords).

L4 Display value
This specifies which actual value should be shown on the display.

Possible display values::

L4	Description
0	Actual value
1	PID control variable
2	PID: P component
3	PID: I component
4	PID: D component
5	Setpoint (C1/C2 or analog input)

L99: Password
Password for the L-- level

d-level:

d0: Defrosting interval
The "defrosting interval" defines the time, after which a defrosting process is started. After each defrosting start, this time is reset and runs the next interval.

Manual defrosting:
Pressing the key UP for at least 3 sec. the defrosting interval is activated earlier. Alternatively, parameter d9 can be applied for this function, too. The next automatic defrosting process takes place again after the time d0 (defrosting synchronisation).

d2: Defrosting temperature
This permits to terminate defrosting when the adjusted desired temperature value is reached. The defrosting time set with "d3" nevertheless runs at the same time, i.e. it functions as safety net to terminate the defrosting process in case the defrosting temperature is not reached.

d3: Defrosting time limit
After the here set time the defrosting process is terminated.

d9: Manual defrosting
At change of 0 - > 1 the defrosting process is started and the defrosting interval is re-set (defrosting synchronisation).

d99: Password
This parameter is to set the password for the d-level.

© Störk-Tronic 2025 • www.stoerk-tronic.com • Subject to modifications.

A-level:

A1: Indication of actual value sensor F1
The here indicted temperature value is the sum of the actual measured value of sensor F1 and the actual value correction according to parameter A2.

A2: Actual value correction sensor F1
With this parameter it is possible to correct actual value deviations caused by sensor tolerances or extremely long sensor lines for example. The control measuring value is increased or decreased by the here set value.

A3: Weighing factor sensor F1
With this parameter the actual value can be submitted to weighing. The measured value is multiplied by it and both indicated in the display and applied for regulation.

A4: Sensor type F1
This parameter allows the selection of the sensor type or the type of analogue input as long as the hardware requirements are met.

Note:
There are two types of current inputs
• Sink (41, 42): The power supply for a current source is integrated in the controller (11-pin terminal: + pin 4, - pin 5) (max. 22 mA). The current to be measured is given by a connected load.
• Source (43, 44): The current to be measured must be supplied from outside (11-pin terminal: + pin 5, - pin 7).

The quantity is counted via the switching input E1. In this case, the setpoint switching function via this input is omitted (see also A7 and A8).

Important:
The parameter corresponds to parameter A60, i.e. a selected setpoint sensor type by A60 cannot be additionally set by A4. Please note that sensor types between 31 (= voltage input 0...10V) and 44 (= current input 4...20mA (source)) require the same hardware.
It is therefore only possible to select a sensor type from this group once - either as an actual value sensor or as a setpoint sensor. Other sensor types are not affected by this.

Conversely, this rule also applies to parameter A60. A current input (A4) selected as actual value cannot additionally be selected by A60. In such a case, only the value 0 (i.e. parameter C1) is available for A60.

A5/A6: Display value for lower/upper value linear analogue input
These parameters are used to scale the linear analogue input. The value to be displayed for the lower and upper value of the input defines the range that is displayed by the controller.

A7: Scaling of the quantity count
Only affects display type = 1 (quantity / sec.) or = 2 (quantity / min.) (see A8). The actual measured value (pulses / sec. = frequency) is converted to a unit of quantity.
The measurable frequency covers the range 2.50 Hz ... 2 kHz (max. resolution 0.01 Hz)
If A8 = 1: quantity = frequency / A7 (corresponds to the quantity per second)
If A8 = 2: quantity = (frequency * 60) / A7 (corresponds to the quantity per minute)

A8: Display type of quantity counting
A8 = 0 pulses / second
(= frequency) in the range 2.50 Hz ... 2 kHz (max. resolution 0.01 Hz)
A8 = 1 quantity / second
(max. resolution 0.01 quantity units)
A8 = 2 quantity / minute
(max. resolution 0.01 quantity units)

Important:
The quantity count is always based on the measurement of pulses / sec.

A9: Actual value, setpoint and parameter unit
Depending on the selected sensor, the physical units can be defined via this parameter. units can be defined via this parameter. These are supplied via the ST-Bus in addition to the values.
The following conventions apply:
• If a temperature sensor is selected, °C (abs.) or K (rel.) is always output (independent of A9).
• If quantity measurement is selected, A8 is used to define the units.
(0: Hz, 1: L/sec, 2: L/min)
• If the sensor uses the current or voltage input, A9 is used to define the units.

Important: The following measured values, setpoints and parameters are affected by the above convention:
Measured values:
A1, C1/C2 (if formed by sensor input)
Setpoints, parameters:
C1/C2, C3, C5, C10, C11, C21, C23, C25, C30, C31, C41, C43, C45, C50, C51, C61, C62, C65, C82, A2

A40: Software filter
Averaging over several measured values can be carried out.
If a sensor is used that reacts very quickly to external influences, averaging ensures a smooth signal curve.

A50: Display of the PID control value
Output of the internally calculated PID control value from -100%...100%.

A51/A52: Display value for lower/upper value at analogue output (0V / 0mA).
When the actual value is output (see b21), the following range adjustment is performed:
When the display value reaches the value set in A51, 0 V or 0 mA is output.
When the display value reaches the value set in A52, 10V or 20mA are output.

A53: Output value full cooling power (-100.0..0%)
A54: Output value "0" power
A55: Output value full heating power (0..100,0%)
When the control value is output (see b21), the following range adjustment is carried out:
If cooling is to take place with 100% cooling power, the voltage set in A53 is output.
If neither heating nor cooling is to take place, the voltage set in A54 is output.
If heating is to be carried out with 100 % heating power, the voltage set in A55 is output.

A60 Setpoint sensor type (analogue input)
With this parameter it is possible to specify the setpoint either as a fixed value from the parameter memory (C1) or variably as an analogue value. The presetting as analogue signal is limited to the voltage (pins 4/5) or current input (pins 4/5 or 5/7). (see also description A4).

Important:
Scaling is carried out as with the selection as actual value sensor via A5 and A6.

A99 Password
This parameter is to set the password for the A-level.

© Störk-Tronic 2025 • www.stoerk-tronic.com • Subject to modifications.

Message	Cause	Error elimination
F 1H F 1L	Sensor error at actual value sensor (H: open-circuit or L: short-circuit at sensor F1)	Check sensor
F2H F2L	Sensor error (H: open-circuit or L: short-circuit at 3-wire correction)	Check sensor
FSH FSL	Sensor error at setpoint sensor (H: open-circuit or L: short-circuit at sensor F1)	Check sensor
EP0 EP 1	0: Error program memory 1: Error parameter memory **=> ALL EXITS WILL BE SWITCHED OFF**	Repair controller
---	Display overrun or key-lock	
Flashing display	Temperature alarm at too high or too low temperature (if activated)	

If an error is detected in the parameter memory (display EP) and therefore the stored settings cannot be used, the control contacts are switched to the de-energised state.

A sensor alarm (display F 1L/F2L or F 1H/F2H or FSL or FSH) is indicated independently by a flashing display and the buzzer sounds. The buzzer can be switched off at any time by pressing the 'DOWN' key. The buzzer is switched on again after 10 minutes if the error is still present.

© Störk-Tronic 2025 • www.stoerk-tronic.com • Subject to modifications.

ST-Bus

The information stated here refer to a control (ST710-PNUVR.102) Version 2.10 - as at 28.07.11

Parameter order, as read with READ_PARA_1 and READ_PARA_2 and possibly changed with WRITE_PARA via serial interface

Formula	Calculated index	Index	Name	Function description
		0		Amount of parameter levels
		1		Amount of parameters in level C
		2		Amount of parameters in level b
		3		Amount of parameters in level H
		4		Amount of parameters in level d
		5		Amount of parameters in level A
1 + <Index 0>	6	6	PA0	Password level C
		7	C1	Setpoint control circuit 1
		8	C2	Setpoint control circuit 1 (*)
		9	C3	Setpoint offset for C1/C2
		10	C4	Switching sense control circuit 1
		11	C5	Hysteresis control circuit 1
		12	C6	Hysteresis mode control circuit 1
		13	C7	Minimum action time control circuit 1"ON"
		14	C8	Minimum action time control circuit 1"OFF"
		15	C9	Function control circuit 1at sensor error
		16	C10	Control range limitation, minimum Setpoint 1
		17	C11	Control range limitation, maximum Setpoint 1
		18	C21	Setpoint control circuit 2 (b1=0)
		19	C23	Delta W2 (b1=1)
		20	C24	Switching sense control circuit 2
		21	C25	Hysteresis control circuit 2
		22	C26	Hysteresis mode control circuit 2
		23	C27	Minimum action time control circuit 2 "ON"
		24	C28	Minimum action time control circuit 2 "OFF""
		25	C29	Function control circuit 2 at sensor error
		26	C30	Control range limitation, minimum Setpoint 2
		27	C31	Control range limitation, maximum Setpoint 2
		28	C41	Setpoint control circuit 3 (b2=0)
		29	C43	Delta W3 (b2=1)
		30	C44	Switching sense control circuit 3
		31	C45	Hysteresis control circuit 3
		32	C46	Hysteresis mode control circuit 3
		33	C47	Minimum action time control circuit 3 "ON"
		34	C48	Minimum action time control circuit 3 "OFF""
		35	C49	Function control circuit 3 at sensor error
		36	C50	Control range limitation, minimum Setpoint 3
		37	C51	Control range limitation, maximum Setpoint 3
		38	C61	Lower alarm value
		39	C62	Upper alarm value
		40	C63	Alarm functions
		41	C64	Special function at boundary alarm
		42	C65	Hysteresis alarm circuit
		43	C82	Proportional area at PID control
		44	C83	Reset time at PID control (I-portion)
		45	C84	Lead time at PID control (D-portion)
		46	C85	Cycle time at PID control
		47	C86	Control variable dead volume
		48	C87	Function PID control circuit at sensor error
		49	C88	PID-mode
		50	C89	Cycle time motor valve (Differential PID)
		51	C90	Anti-windup, lower limit for I component
		52	C91	Anti-windup, upper limit for I component
1 + <Index 0> + <Index 1>	47	53	b99	Password b-level
		54	b1	Activation setpoint combination for thermostat 1 and 2
		55	b2	Activation setpoint combination for thermostat 1 and 3
		56	b11	Delay control circuit 1, 2, 3 after "Power-On"

© Störk-Tronic 2025 • www.stoerk-tronic.com • Subject to modifications.

Formula	Calculated index	Index	Name	Function description
		57	b12	Mutual delay control circuit 1, 2, 3
		58	b13	Alarm suppression after "Power-On", "setpoint"
		59	b21	Linkage analogue output
1 + <Index 0> + <Index 1> + <Index 2>	54	60	H99	Password H- level
		61	H1	Key-lock
		62	H11	Indication mode display 1
		63	H12	Display 1 mode
		64	H15	Temperature scale
		65	H16	Indication standby
		66	H17	Mode following "Power-On"
		67	H31	Assigning function key 1
		68	H32	Assigning function key 2
		69	H33	Function Switch input E1
		70	H35	Activation of key acknowledgement
		71	H41	Function output K1
		72	H42	Function output K2
		73	H43	Function output K3
		74	H44	Function output K4
		75	H51	Mains frequency
		76	Lo	ST-Bus address
1 + <Index 0> + <Index 1> + <Index 2> + <Index 3>	70	77	d99	Password d-level
		78	d0	Defrosting interval TH1
		79	d2	Defrosting temperature TH1
		80	d3	Defrosting time limit TH1
		81	d9	Manual defrosting TH1
1 + <Index 0> + <Index 1> + <Index 2> + <Index 3> + <Index 4>	75	82	A99	Password A-level
		83	A1	Indication of actual value analogue input
		84	A2	Actual value correction thermo couple/temp. sensor
		85	A3	Weighing factor analogue input
		86	A4	Sensor type (actual value, analogue input)
		87	A5	Indication value for lower value linear analogue input
		88	A6	Indication value for upper value linear analogue input
		89	A7	Scale of quantity count
		90	A8	Display mode of quantity count
		91	A9	Actual value, setpoint and parameter unit
		92	A40	Time constant of the software filter
		93	A50	Indication of the PID variable
		94	A51	Indication value for lower value at analogue output
		95	A52	Indication value for upper value at analogue output
		96	A53	Indication value full cooling performance (-100.0...0%)
		97	A54	Indication value "0" performance
		98	A55	Indication value full heating performance (0...100.0%)
		99	A60	Setpoint sensor type (analogue input)

Bit allocation status 0 and status 1

The two status words can be read with READ_RAM (see actual values table)

	Bit	Message display unit	Cause
Status 0	0		Control on or off
	3		Defrosting activated
	4		Alarm acknowledgement
	14		Internal buzzer on
	15		General error (see status 1)

© Störk-Tronic 2025 • www.stoerk-tronic.com • Subject to modifications.

	Bit	Message display unit	Cause
Status 1	0	F1L	Sensor error - short-circuit
	1	F1H	Sensor error - open-circuit
	2	F2L	Auxiliary Sensor error - short-circuit
	3	F2H	Auxiliary Sensor error - open-circuit
	4	LoTemp	Temperature alarm at too low temperature
	5	HiTemp	Temperature alarm at too high temperature
	8	FSL	Setpoint sensor error - short-circuit
	9	FSH	Setpoint sensor error - open-circuit

Annotations for status 0
- Bit 0 (controller on/off) and Bit 4 (Alarm acknowledgment) can be set or deleted with WRITE RAM.
- Bit 15 (General error) is set, if at least 1 error bit of status 1 is set.

Order of actual values, which can be read via serial interface with READ_RAM.

Index	Text	Display
0	A 1	Actual value analogue input
1	A50	PID regulating variable
2	P	P-portion
3	I	I-portion
4	D	D-portion
5	C1/C2	Setpoint either C1/C2 or analogue input
6	–0	binary: status 0 (only bits 0..15) – operating condition
7	–1	binary: status 1 (only bits 0..15) – error
8	–2	binary: status 2 (only bits 0..15) – flashing mask (e.g. satellite display)
9	–3	binary: status 3 (only bits 0..15) – output signals
10	–4	binary: status 4 (only bits 0..15) – input signals
11	–5	binary: status 5 (only bits 0..15) – special conditions

Bit allocation of the binary-coded actual values (status 0 – 5)

Bit	Status 0 Operating conditions (–0)	Status 1 Error (–1)	Status 2 Flashing mask (–2)	Status 3 Output signals (–3)	Status 4 Input signals (–4)	Status 5 Special conditions (–5)
0	Controller 'on'	F1L	Temp. alarm	Thermostat 1	E1	2nd setpoint activated
1		F1H		Thermostat 2		Auto tuning activated
2		F2L		Thermostat 3		Setpoint via analogue input
3	Defrosting activated	F2H		Alarm		
4	Alarm acknowl.	LoTemp		PID heating		
5		HiTemp		PID cooling		
6				F-key 1 switches		
7				F-key 2 switches		
8		FSL		Alarm buzzer		
9		FSH				
10						
11						
12						
13						
14	Buzzer 'on'					
15	Global error					

© Störk-Tronic 2025 • www.stoerk-tronic.com • Subject to modifications.

MODBUS

Both RTU (Remote Terminal Unit) and ASCII modes are supported.

The ST710 is the slave. The slave address is set as parameter L 13.

Physik:

	Parameter	
Format None	L10=0 (default)	Modbus is disabled, ST bus is enabled
Format RTU	L10=1	11 Bit (1 start bit, 8 data bits with LSB first, 1 parity bit, 1 stop bit)
Format ASCII	L10=2	10 Bit (1 start bit, 7 data bits with LSB first, 1 parity bit, 1 stop bit)
Baud rate	L11	4800, 9600, 19200, 57600, 115200 bps
Parity	L12	none, odd, even
Own address (Slave)	L13	0: address like ST-Bus (parameter L0) 1 ... 250

List of implemented function codes that are supported:

0x01 Read Coil
0x02 Read Discrete Input
0x03 Read Holding Register
0x04 Read Input Register
0x05 Write Single Coil
0x06 Write Single Register
0x11 Report Slave ID

Examples

Read Holding Register

Request: Read Register 2 (Read ctual value sensor F1, i.e.. +15,3°C)

Slave address	Function code	Start address (0x0000...0xFFFF)		Number of registers 1...125 (0x01...0x7D)		CRC (CRC 16, MSB first)	
0x01	0x03	0x03	0xE8	0x00	0x01		

Antwort: Read Register 2

Slave address	Function code	Byte Count	Register value (MSB first)		CRC (CRC 16, MSB first)	
0x01	0x03	0x02	0x00	0x99		

F: Read Register 2

Slave address	Function code	Exception Code	CRC (CRC 16, MSB first)	
0x01	0x83	0x01...0x04		

Exception Code	0x01	Invalid function
	0x02	Invalid address
	0x03	Invalid value
	0x04	Slave Device error

Write Single Register

Request: Writing a single register for a new setpoint1 = +21,0°C)

Slave address	Function code	Start address (0x0000...0xFFFF)		Register value (MSB first)		CRC (CRC 16, MSB first)	
0x01	0x06	0x04	0xAF	0x00	0xD2		

Response: Write Single Register 4

Slave address	Function code	Register value (MSB first)		Register Wert (Echo of Request)		CRC (CRC 16, MSB first)	
0x01	0x06	0x04	0xAF	0x00	0xD2		

Error: Write Single Register 4

Slave address	Function code	Exception code	CRC (CRC 16, MSB first)	
0x01	0x86	0x01...0x04		

Exception Code	0x01	Invalid function
	0x02	Invalid address
	0x03	Invalid value
	0x04	Slave Device error

© Störk-Tronic 2025 • www.stoerk-tronic.com • Subject to modifications.

Report Slave ID

Request: Slave ID

Slave address	Function code	CRC (CRC 16, MSB first)	
0x01	0x11		

Response: Slave ID

Slave address	Function code	Byte Count	Slave ID	Run indicator status	Additional data	CRC (CRC 16, MSB first)	
5	0x11	0x0C	0x07	0x00 (Off) 0xFF (On)	10 Bytes MSB first		

Slave ID	Byte 1,	0x07
Run indicator status	Byte 2	0x00 (=OFF) or 0xFF (=ON)
Additional data	Byte 3	Software number (high Byte)
	Byte 4	Software number (low Byte)
	Byte 5	Software Version (high Byte)
	Byte 6	Software Version (low Byte)
	Byte 7	Serial number (high Byte)
	Byte 8	Serial number (low Byte)
	Byte 9	Production day
	Byte 10	Production month
	Byte 11	Production year (high Byte)
	Byte 12	Production year (low Byte)

Error: Slave ID

Slave address	Function code	Exception Code	CRC (CRC 16, MSB first)	
0x01	0x91	0x01...0x04		

xception Code	0x01	Invalid function
	0x02	Invalid address
	0x03	Invalid value
	0x04	Slave Device error

Register table

The base address for the registers is **1001**.
The values can be read using the function codes “**Read Holding Register**” or “**Read Input Register**”. Up to register number 21, the values have an accuracy of one or two decimal places, i.e., you must divide the transferred value by 10 or 100 to obtain the actual value (see the “Resolution” column in the table below).

Register	R/W	Name (STBus)	Function	Bereich	Resolution	Unit
1	R	A 1	Actual value	-99 ... 999 °C (-10000 = error)	0,1 K	signed
2	R	A50	PID control variable	-100 ... 100 %	0,01 %	signed
3	R	P	PID: P component	-100 ... 100 %	0,01 %	signed
4	R	I	PID: I component	-100 ... 100 %	0,01 %	signed
5	R	D	PID: D component	-100 ... 100 %	0,01 %	signed
6	R	C	Setpoint either C1/C2 or analog input	-99 ... 999 °C (-10000 = error)	0,1 K	signed

© Störk-Tronic 2025 • www.stoerk-tronic.com • Subject to modifications.

Status Register table

The base address of the status registers is **1101**.

The values can be read using the function codes “**Read Holding Register**” or “**Read Input Register**”.

Register	Coil	R/W	Name (ST-Bus)	Function	Range	Unit
1	1 - 16	R	–0	Status 0 (Bit 0 ... 15)	0x0000 ... 0xFFFF	unsigned
2	17 - 32	R	–1	Error (Bit 16 ... 31)	0x0000 ... 0xFFFF	unsigned
3	33 - 48	R	–2	Digital outputs (Bit 32 ... 47)	0x0000 ... 0xFFFF	unsigned
4	49 - 64	R	–3	Digital inputs (Bit 48 ... 63)	0x0000 ... 0xFFFF	unsigned
5	65 - 80	R	–5	Special flags (Bit 64 ... 79)	0x0000 ... 0xFFFF	unsigned

Individual bits in the status registers can also be read directly using the function code “**Read Coil**” or “**Read Discrete Input**”. The meaning of the individual bits can be found in the tables below. The few writable bits can be written to collectively using the function code “Write Single Register” or individually using “Write Single Coil.”

Writing bits (coils) that are READ ONLY is ignored.

Unused bits are output with the value zero.

Details Status 0 (Coil 1-16)

Bit	Coil	Status 0	R/W
15	16	General error	R
14	15	Buzzer	R
13	14		R
12	13		R
11	12		R
10	11	Error EP1	R
9	10	Error EP0	R
8	9		
7	8		
6	7		
5	6	Parameter change	R
4	5	Buzzer acknowledge	R/W
3	4	Defrost	R
2	3		
1	2		
0	1	Controller On	R/W

Details Status 1 (Coil 17-32)

Bit	Coil	Status 1	R/W
15	32		
14	31		
13	30		
12	29		
11	28		
10	27		
9	26	FSH - setpoint sensor error - break	
8	25	FSL - setpoint sensor error - short circuit	
7	24		
6	23		
5	22	Over temperature alarm	
4	21	Under temperature alarm	
3	20	F2H - sensor 2 error - break	R
2	19	F2L - sensor 2 error - short circuit	R
1	18	F1H - sensor 1 error - break	R
0	17	F1L - sensor 1 error - short circuit	R

© Störk-Tronic 2025 • www.stoerk-tronic.com • Subject to modifications.

Details Status 2 (Coil 33-48)

Bit	Coil	Status 2	R/W
15	48		
14	47		
13	46		
12	45		
11	44		
10	43		
9	42		
8	41	Digital input activated	R
7	40	F-key 2 activated	R
6	39	F-key 1 activated	R
5	38	PID cooling	R
4	37	PID heating	R
3	36	Alarm	R
2	35	Thermostat 3	R
1	34	Thermostat 2	R
0	33	Thermostat 1	R

Details Status 3 (Coil 49-64)

Bit	Coil	Status 3	R/W
15	64		
14	63		
13	62		
12	61		
11	60		
10	59		
9	58		
8	57		
7	56		
6	55		
5	54		
4	53		
3	52		
2	51		
1	50	Controller ON <-> OFF	R
0	49	Switching SW1 <-> SW2	R

Details special conditions (Coil 65-80)

Bit	Coil	Error 0	R/W
2	67	Setpoint via analog input	R
1	66	Auto-Tuning running	R
0	65	2nd setpoint activated	R

Setpoint register table

The base address of the setpoint registers is **1201**.
The values can be read using the function codes "**Read Holding Register**" or "**Read Input Register**". The values have an accuracy of one decimal place, i.e., the transferred value must be divided by 10 to obtain the actual value.
A new setpoint can be written using the function code "**Write Single Register**".
The new value must be multiplied by 10 and then transferred.

Register	R/W	Parameter	Function	Range	Unit
1	R/W	C 1	Setpoint control circuit 1	C10 ... C11	signed
2	R/W	C 2	Alternative setpoint control loop 1 – can be activated via the switch input or function keys	C10 ... C11	signed
3	R/W	C21	Setpoint control circuit 2	C30 ... C31	
4	R/W	C41	Setpoint control circuit 3	C50 ... C51	

© Störk-Tronic 2025 • www.stoerk-tronic.com • Subject to modifications.

© Störk-Tronic 2025 • www.stoerk-tronic.com • Subject to modifications.

Inputs	**E1:**	external potential-free contact
Measuring inputs	**F1:**	Temperature sensor, selection from the following types: Measuring ranges: Type J: -99°C...+1200°C (zero compensation 25.0°C)* Type K: -99°C...+1370°C (zero compensation 25.0°C) Pt100-2: -99°C...+690°C Pt100-3: -99°C...+550°C (max. 2x 20R lead resistance) Pt1000-2: -99°C...+500°C Pt1000-3: -99°C...+450°C (max. 2x 20R lead resistance) PTC: -50°C...+150°C U(0-10V): -0.1V...10.1V U (2-10V): 1.5V...10.1V I(0-20mA): -0.1mA...20.1mA I (4-20mA): 3.5mA...20.1mA * Due to hardware tolerances, the upper limit cannot be guaranteed. Measuring accuracy related to the entire measuring range +/- 0.5 %. vThe inputs for current or voltage can be adapted to the measuring and display ranges by suitable parameterisation.
Outputs	**K1:** **K2:** **K3:** **K4:**	Relay, normally-open contact, 8(1.5)A 250V~, function defined by parameter U1 Relay, normally-open contact, 8(1.5)A 250V~, function defined by parameter U2 Relay, normally-open contact, 8(1.5)A 250V~, function defined by parameter U3 Relay, change-over contact, 8(1.5)A 250V~, function defined by parameter U4 Voltage output 0 ... 10V, internal resistance approx. 100 Ohm, short-circuit proof Additional built-in buzzer, 85dB
Display		1 4-digit LED display, height 13mm, colour red, temperature display. 3 LEDs, diameter 3mm, colour red, for status display
Interface		**ST-Bus / Modbus communication interface** Interface driver: RS485, galvanically not separated The network has to be installed in lines topology and terminated with a 120 Ohm resistance on each side. In case of networking always connect port “A” with port “A” and port “B” with port “B”. Crossing over is not permissible!
Power supply		100 ... 240V AC +/-10% (50/60Hz)
Connectors		Screw/plug-in terminals Terminal A: 12-pole, grid 5.0mm, for cables up to 2.5 mm² Terminal B: 11-pole, grid 3.5mm, for cable up to 1.5 mm²
Ambient conditions		Storage temperature: -20...+70°C Operating temperature: 0...+55°C Relative humidity: max. 75% without dew
Weight		ca 190 g, without sensor
Enclosure		Front IP65, IP00 from back

© Störk-Tronic 2025 • www.stoerk-tronic.com • Subject to modifications.

Installation data

Unit is to be installed in an instrument panel.

Front size:	84 x 42 mm
Panel cut-out:	67.5 x 31.5 mm
Installation depth:	ca. 90 mm, mounting by fixing strap

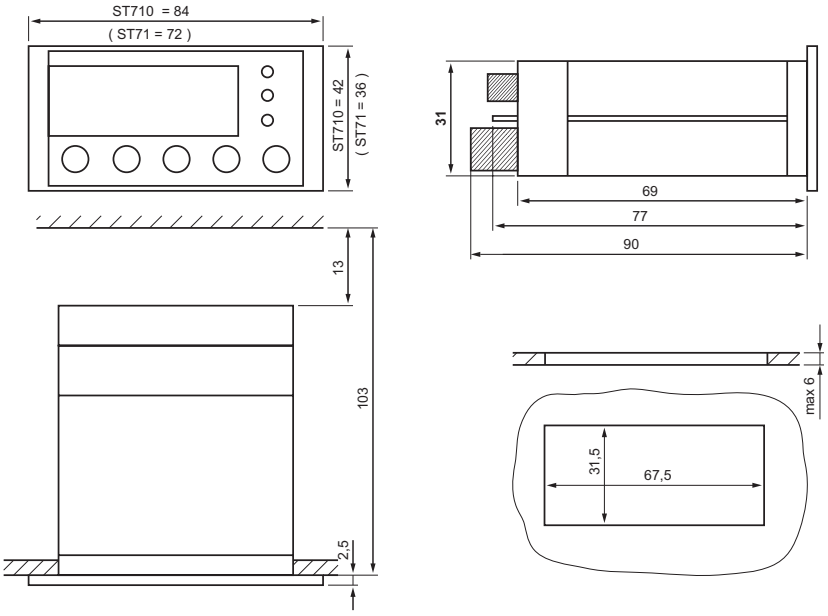

© Störk-Tronic 2025 • www.stoerk-tronic.com • Subject to modifications.