ST710-PNUV.102

PID controller

Order number 900310.005

Wiring diagram

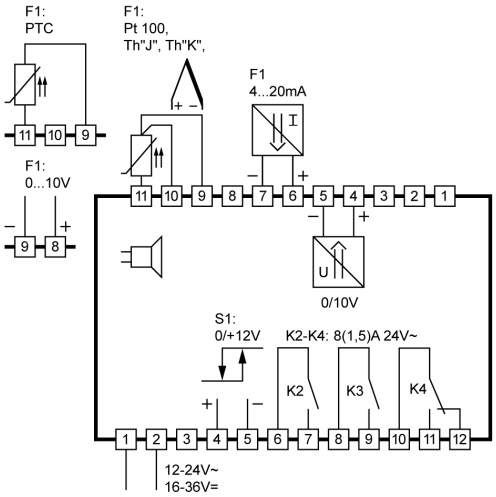

Product description

This micro-processed controller serves for temperature control at high measuring accuracy. Beside resistance sensors and semiconductor thermo element the multi-sensor sensor entrance can equally process 0... 10V and/or 4...20mA. The PID regulation and/or thermostat regulation can be activated via parameter setting. Outputs are three relay contacts, a voltage output to control an external SSR and an analogue output. Red LED lamps indicate the status of the output relays. The setpoints and parameters determining the process are adjusted with a 5-field plastic foil keyboard. **Please note that the analogue output is not galvanically separated from the supply voltage. To avoid any problems operate the controller with a separate transformer.**

Range: dependent on the type of sensor
Front size: 84mm x 42mm
Panel cut-out: 67.5mm x 31.5mm
Connector: plug and socket

ST 710 (715)... / ST71...

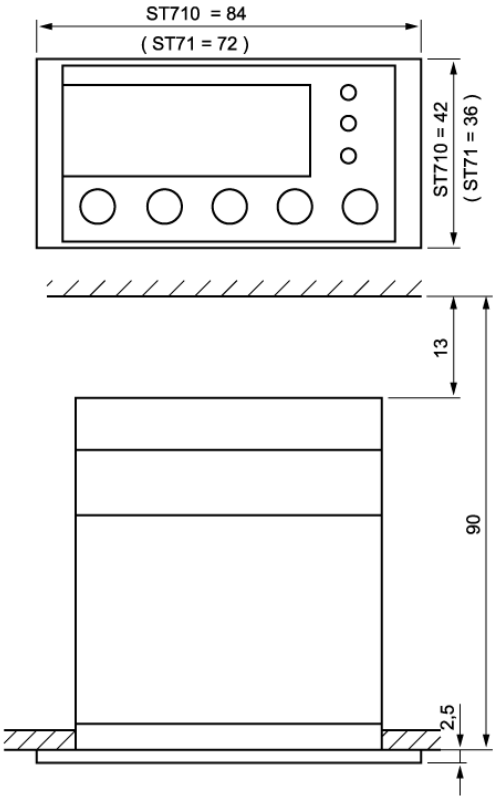

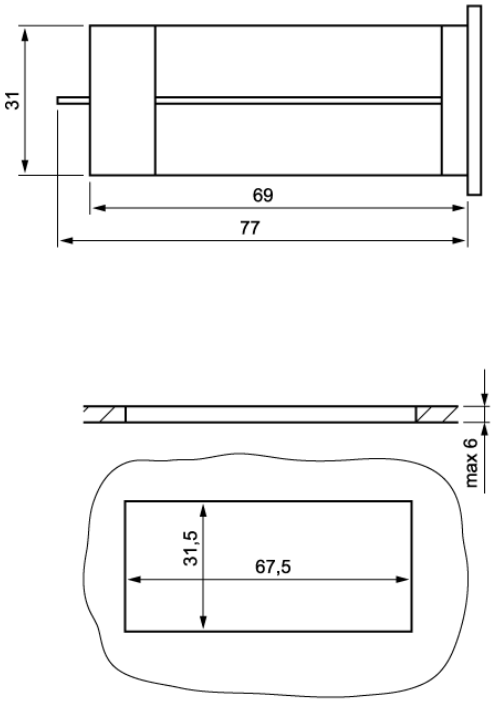

SOFTWARE .102

Adjustment options

Key UP
Pressing this key you can increase the parameter or parameter value or scroll the parameter list.

Key DOWN
Pressing this key you can decrease the parameter or parameter value or scroll the parameter list. At alarm the buzzer function can be switched off with this key.

Function key 2 (standard setting: switch setpoint)
Switching the controller on or off. After net interruption, parameter H17 is automatically set.

Key SET
Holding this key, the desired value is indicated.
Additionally, this key is used for setting parameters.

Function key 2 (standard setting: switch setpoint)
Switching the controller on or off. After net interruption, parameter H17 is automatically set.

First control level:

Parameter setting of the control setpoint

The control setpoint C1 is accessible directly with SET key.
Pressing also the UP or DOWN key it can be adjusted.

Para-meter	Function description	Adjustment range	Standard setting	Custom setting
C1	Control setpoint 1 for control circuit 1 and/or PID-regulation	C10...C11	0.0 °C	
C2	Control setpoint 2 for control circuit 1 (*)	C10...C11	0.0 °C	

* The activation of the second setpoint of circuit 1 C2 is indicated on the display with a flashing point to the right. It can either be activated via switching entrance or with *function key 1* (depending on parameter).

Software version
The version number of the software will show when pressing SET + UP + DOWN at the same time.

Menu level

When simultaneously pressing the UP and DOWN key for at least 4 seconds, the controller changes to menu level. It consists of several sub-menus listed by the respective initial letter followed by 2 lines (e.g. C -- for the C-level).

Parameter	Sub-menu	Function
C--	Controller level	Application parameters
b--	Intermediate level	Connecting parameters
H--	Hardware level	Hardware parameters
d--	Defrost level	Defrosting parameters (control circuit 1)
A--	Analogue level	Parameter for analogue in- and outputs

Adjustment of control parameters

Selection of the sub-menu is effected by scrolling with the UP and DOWN key. Upon pressure of the SET key the password of the respective level is requested. The password must be adjusted by additionally pressing the UP or DOWN key (standard value: 0).

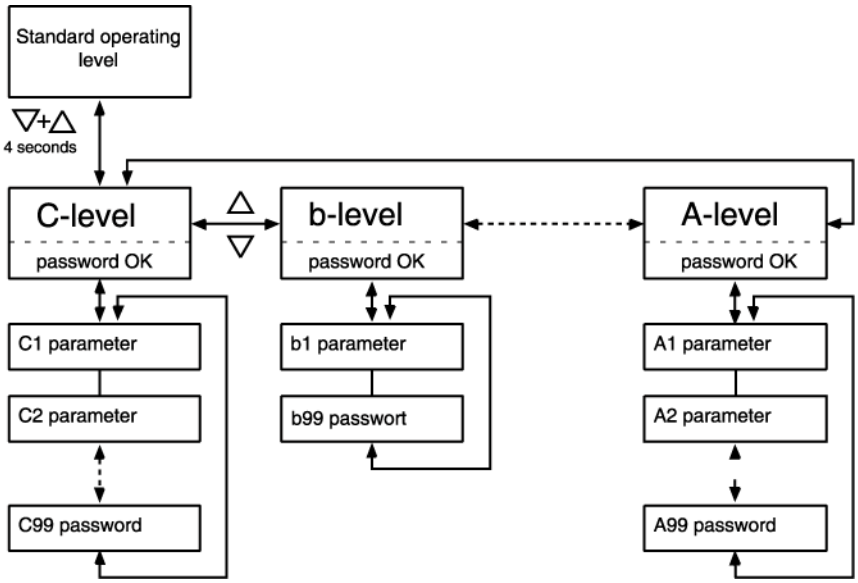

The last parameter of the respective sub-menu (e.g. C99, b99...) corresponds to the current password of this level and can be changed there.

NOTE: Forgetting the password requires sending the controller to Stoerk Tronic.

If the password is correct, the display jumps to the sub-menu and shows the first listed parameters when the set key is released. Pressing the SET key, the value of the selected parameter is indicated. Additionally pressing the UP or DOWN key, the value can be adjusted. Releasing all keys, the new value is saved long term.
If UP and DOWN keys are simultaneously pressed again for at least 4 seconds, the display switches to the menu level again. Upon repeated pressing for 4 seconds or no pressing of any key for more than 60 seconds, the system jumps back to the initial state.

The C-level (controller)

This level contains the application parameters.

Thermostat 1

Para-meter	Function	Adjustment range	Standard setting	Custom setting
C1	Setpoint control circuit 1	-99 ... 999°C	0.0°C	
C2	Setpoint control circuit 1 (*)	-99.0 ... 99.0°K	0.0°C	
C3	Offset for C1/C2	-99.0 ... 99.0°K	0.0°K	
C4	Switching sense control circuit 1	0: heating function 1: cooling function	0	
C5	Hysteresis control circuit 1	0.1 ... 99.9°K	1.0°K	
C6	Hysteresis mode control circuit 1	0: symmetrical 1: one-sided	0	
C7	Minimum action time control circuit 1"ON"	0 ... 400 sec.	0 sec.	
C8	Minimum action time control circuit 1"OFF"	0 ... 400 sec.	0 sec.	
C9	Function control circuit 1 at sensor error	0: relay off 1: relay on	0	
C10	Control range limitation, minimum Setpoint 1	-99.0°C ... C11	-99.0°C	
C11	Control range limitation, maximum Setpoint 1	C10 ... 999.0°C	999.0°C	

* The activation of the second desired value C2 is indicated on the display with a flashing point to the right. It can either be activated via switching entrance or with *function key 1* (depending on parameter).

Thermostat 2

Para-meter	Function	Adjustment range	Standard setting	Custom setting
C21	Setpoint control circuit 2 (b1=0)	-99...999°C	0°C	
C23	Delta W2 (b1=1)	-99...99°K	0°K	
C24	Switching sense control circuit 2	0: heating function 1: cooling function	0	
C25	Hysteresis control circuit 2	0.1 ... 99.9°K	1°K	
C26	Hysteresis mode control circuit 2	0: symmetrical 1: one-sided	0	
C27	Minimum action time control circuit 2 "ON"	0...400 sec.	0 sec.	
C28	Minimum action time control circuit 2 "OFF""	0...400 sec.	0 sec.	
C29	Function control circuit 2 at sensor error	0: relay off 1: relay on	0	

Thermostat 3

Para-meter	Function	Adjustment range	Standard setting	Custom setting
C41	Sollwert control circuit 3 (b2=0)	-99...999°C	0.0°C	
C43	Delta W3 (b2=1)	-99.0 ... 99.0°K	0.0°K	
C44	Switching sense control circuit 3	0: heating function 1: cooling function	0	
C45	Hysteresis control circuit 3	0.1 ... 99.9°K	1.0°K	
C46	Hysteresis mode control circuit 3	0: symmetrical 1: one-sided	0	
C47	Minimum action time control circuit 3 "ON"	0...400 sec.	0 sec.	
C48	Minimum action time control circuit 3 "OFF""	0...400 sec.	0 sec.	
C49	Function control circuit 3 at sensor error	0: relay off 1: relay on	0	

Alarm circuit

Para-meter	Function	Adjustment range	Standard setting	Custom setting
C61	Lower alarm value	-99.0 ... C62	-10.0	
C62	Upper alarm value	C61 ... 999.0	10.0	
C63	Alarm functions	0: Boundary alarm, relative boundaries 1: Boundary alarm, absolute boundaries 2: Range alarm, relative boundaries 3: Range alarm, absolute boundaries 4: Boundary alarm, relative boundaries, alarm invers 5: Boundary alarm, absolute boundaries, alarm invers 6: Range alarm, relative boundaries, alarm invers 7: Range alarm, absolute boundaries, alarm invers	0	
C64	Special function at boundary alarm	0: not active 1: flashing display 2: buzzer 3: buzzer + flashing display 4: like 3, buzzer can be cancelled 5: like 4, restarts after 10 min. 6: like 4, restarts after 30 min.	0	
C65	Hysteresis alarm circuit	0.1 ... 9.9°K	1°K	

PID-Regler

Para-meter	Function	Adjustment range	Standard setting	Custom setting
C82	Proportional area at PID regulation	0.1 … 999.0°K	10°K	
C83	Reset time at PID regulation (I-portion)	0...999 sec., 0: inactive	500 sec.	
C84	Lead time at PID regulation (D-portion)	0...999 sec., 0: inactive	50 sec.	
C85	Cycle time at PID regulation	2...100 sec.	8 sec.	
C86	Control variable dead volume	0.0 … 100.0%	0.0%	
C87	Function PID control circuit at sensor error	-100.0% ... 0 ... 100.0%	0.0%	
C88	PID-mode	0: PID 1: DiffPID (2 relays – heating, cooling) 2: PID with dead volume at analogue exit	0	
C89	Cycle time motor valve (Differential PID)	2...100 sec.	8 sec.	

Password

Para-meter	Function	Adjustment range	Standard setting	Custom setting
C99	Password C-level	-99…999	0	

Parameter description C-level:

C1: Setpoint control circuit 1
This value corresponds with the setpoint set at the first control level.

C2: Setpoint control circuit 1 (thermostat) at closed switching input
By closing switching input E1, setpoint C1 can be switched to a setpoint C2.
The setpoint C2 can only be accessed if entrance E1 is closed. The setpoint C2 can only be activated, if the external input is configured for setpoint change-over.

C3: Offset for C1/C2
This adjusted value will build the difference to the setpoint for control circuit 1, i.e. there is no regulation according to the pre-set value, but according to the sum of desired value and the value of C3.

C4: Switching sense control circuit 1
The switching sense for the relays, i.e. cooling or heating function, can be programmed independently. Heating function means that the contact falls as soon as the pre-set setpoint is reached, thus power interruption. At cooling function the contact only tightens, if the actual value is above the required setpoint.

C5: Hysteresis control circuit 1
The hysteresis can be set symmetrically or one-sided at the desired value (see C6). At one-sided setting, the hysteresis works downward with heating contact and upward with cooling contact. At symmetrical hysteresis, half of the hysteresis' value is effective below and half of the value above the switching point (see fig. 1 and 2).

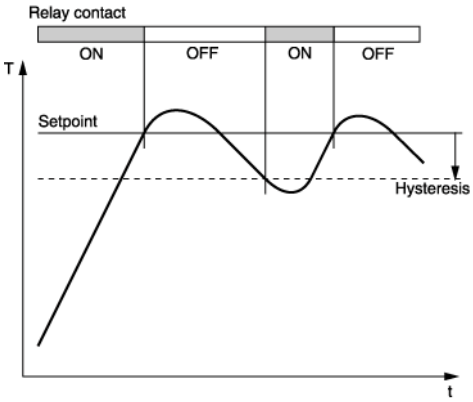

Fig. 1: Heating controller, one-sided hysteresis

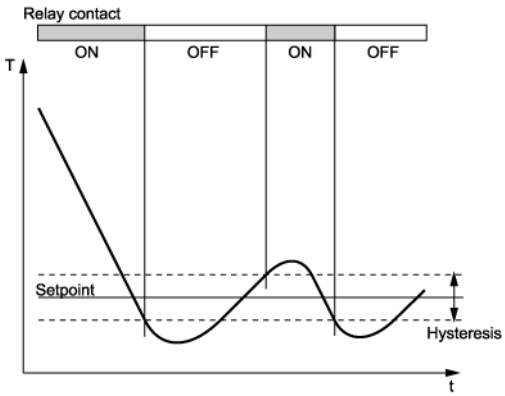

Fig. 2: Cooling controller, symmetrical hysteresis

C6: Hysteresis mode control circuit 1
These parameters allow selection as to whether the hysteresis values which are adjustable with C5, are set symmetrically or one-sided at the respective switching point. At symmetrical hysteresis, half of the hysteresis' value is effective below and half of the value above the switching point. The one-sided hysteresis works downward with heating contact and upward with cooling contact.

C7/C8: Minimum action time control circuit 1 "On"/"Off"
These parameters permit a delay in switching on/off the relay in order to reduce the switching frequency. The adjusted time sets the entire minimum time period for a switching-on or switching-off phase.

C9: Function control circuit 1 at sensor error
At sensor error the selected relay (see H41, 42, 43) falls back into the condition pre-set here.

C10: Setpoint limit (minimum) setpoint 1
C11: Setpoint limit (maximum) setpoint 1
The adjustment range of the setpoint can be limited in both directions. This is to prevent the end user of a unit from setting inadmissible or dangerous setpoints.

C21: Setpoint control circuit 2 (thermostat) (b1=0)
If b1=1, this value is ineffective.

C23: Value deltaW2 (b1=1)
If b1=1, the setpoints for control circuit 1 and 2 are linked with one another via switching difference deltaW2 (C23) (operation with deltaW).
The following applies: Setpoint thermostat 2 = setpoint control circuit 1 (C1/C2) + deltaW2.
This difference can take positive or negative values. Thus, a leading or following contact can be realised.

C24: Switching sense control circuit 2
The switching sense for the relays, i.e. cooling or heating function, can be programmed independently at works. Heating function means that the contact falls as soon as the pre-set setpoint is reached, thus power interruption. At cooling function the contact only tightens, when the actual value is above the required setpoint.

C25: Hysteresis control circuit 2
The hysteresis can be set symmetrically or one-sided at the setpoint (see C26). At one-sided setting, the hysteresis works downward with heating contact and upward with cooling contact. At symmetrical hysteresis, half of the hysteresis' value is effective below and half of the value above the switching point (see fig. 1 and 2).

C26: Hysteresis mode control circuit 2
These parameters allow selection as to whether the hysteresis values which are adjustable with C25, are set symmetrically or one-sided at the respective switching point.
At symmetrical hysteresis, half of the hysteresis' value is effective below and half of the value above the switching point. The one-sided hysteresis works downward with heating contact and upward with cooling contact.

C27: Minimum action time control circuit 2 "On"
C28: Minimum action time control circuit 2 "Off"
These parameters permit a delay in switching on/off the relay, in order to reduce the switching frequency. The adjusted time sets the entire minimum time period for a switching-on or switching-off phase.

C29: Function control circuit 2 at sensor error
At sensor error the selected relay (see H41, 42, 43) falls back into the condition pre-set here.

C41: Setpoint thermostat 3 (b2=0)
If b2=1, this value is ineffective.

C43: Value deltaW3 (b2=1)
If b2=1, the setpoints for thermostat 1 and 3 are linked with one another via switching difference deltaW3 (operation with deltaW). The following applies:
Setpoint thermostat 3 = setpoint thermostat 1 (C1/C2) + deltaW3.
This difference can take positive or negative values. Thus a leading or following contact can be realised.

C44: Switching sense control circuit 3
The switching sense for the relays, i.e. cooling or heating function, can be programmed independently at works. Heating function means that the contact falls as soon as the pre-set setpoint is reached, thus power interruption. At cooling function the contact only tightens, if the actual value is above the required setpoint.

C45: Hysteresis control circuit 3
The hysteresis can be set symmetrically or one-sided at the setpoint (see C6). At one-sided setting, the hysteresis works downward with heating contact and upward with cooling contact. At symmetrical hysteresis, half of the hysteresis' value is effective below and half of the value above the switching point (see fig. 1 and 2).

C46: Hysteresis mode control circuit 3
These parameters allow selection as to whether the hysteresis values which are adjustable with C45, are set symmetrically or one-sided at the respective switching point.
At symmetrical hysteresis, half of the hysteresis' value is effective below and half of the value above the switching point. The one-sided hysteresis works downward with heating contact and upward with cooling contact.

C47: Minimum action time control circuit 3 "On"
C48: Minimum action time control circuit 3 "Off"
These parameters permit a delay in switching on/off the relay in order to reduce the switching frequency. The adjusted time sets the entire minimum time period for a switching-on or switching-off phase.

C49: Function control circuit 3 at sensor error
At sensor error the selected relay (see H41, 42, 43) falls back into the condition pre-set here.

C61: Lower alarm value
C62: Upper alarm value
The exit alarm is a boundary alarm or a range alarm with one-sided hysteresis (see parameter C65). Both at the boundary alarm and the range alarm, limit values can be relative, i.e. going along with the setpoint C1/C2, or absolute, i.e. independent of the setpoint C1/C2. At boundary alarm the hysteresis works one-sided inwardly, and at range alarm outwardly (see fig. 3-6, next side).

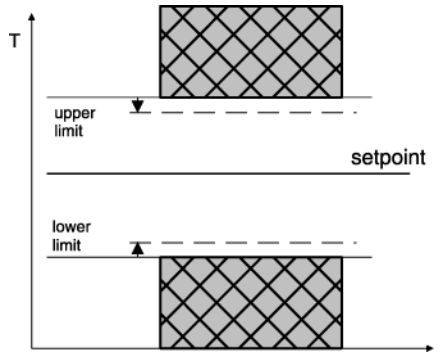

Fig. 3: Boundary alarm, alarm contact normal
C63=0 limits relative
C63=1 limits absolute

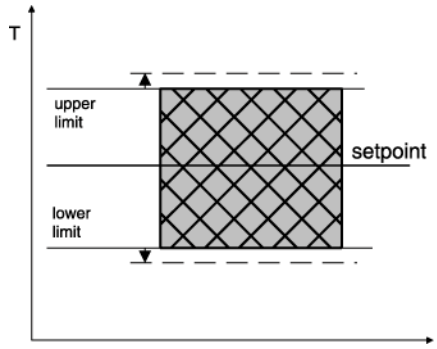

Fig. 4: Range alarm, alarm contact normal
C63=2 limits relative
C63=3 limits absolute

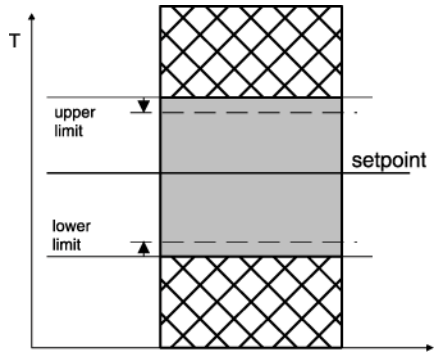

Fig. 5: Boundary alarm, alarm contact invers
C63=4 limits relative
C63=5 limits absolute

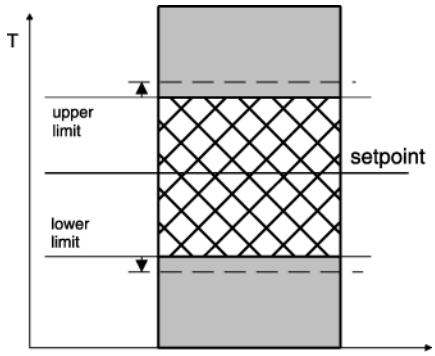

Fig. 6: Range alarm, alarm contact invers
C63=6 limits relative
C63=7 limits absolute

C63: Function exit alarm
The exit alarm evaluates an upper and a lower limit value (see parameters C61 and C62), whereas a selection is possible as to whether the alarm is active if the temperature lies within these two limits, or whether the alarm is released if the temperature lies beyond them. In the case of sensor error, the alarm is activated independently of this adjustment. The exit can also be inverted, so that it functions like a release (see fig. 3 – 6).

C64: Special function at alarm
Here can be selected whether, in the case of emergency, the indication to flash and/or the buzzer is to start. Sensor alarm (display F1L or F1H) is indicated independently thereof by flashing display and the buzzer runs off.

C65: Hysteresis alarm circuit
Hysteresis is set one-sided at the adjusted limit value. It becomes effective depending on alarm definition (see fig. 3-6).

C82: Proportional band at PID regulation
The proportional band works in such a way that with approximation of the actual value to the setpoint the variable is reduced linearly from +-100% to 0%.

C83: Reset time at PID regulation (I-portion)
C84: Lead time at PID regulation (D-portion)
The proportional controller as such has a remaining deviation of the actual value from the setpoint. The integral portion provides for a complete compensation of this offset.
The reset time is a measure for the period of time needed to adjust a remaining temperature deviation of the size of the proportional range.
If a small reset time is set, a fast post-adjustment will take place. At a too small reset time, however, the system may tend to vibrate.
The differential portion dampens temperature changes.
If lead time is set for long, damping is strong. At too long lead time, however, the system may tend to vibrate. At setting 0 the values are ineffective. It is therefore possible to realise a pure PI or PD regulation.

C85: Cycle time at PID regulation
The cycle time is the time, in which the control exit runs through one switching period, i.e. once switched out and once switched on. The smaller the cycle time, the faster the regulation. By consequence, however, there is also an increased switching frequency of the output, which can lead to rapid wear of relay contacts. For very fast control ways with the respective high switching frequency a voltage output is therefore of advantage.

C86: Control variable dead volume

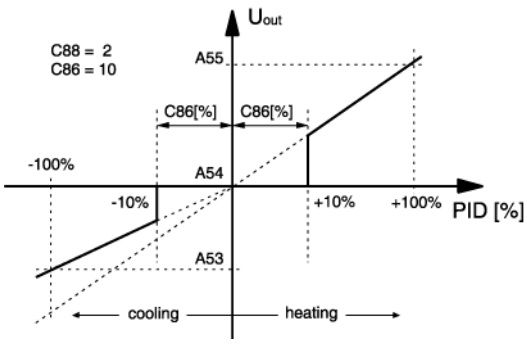

Fig. 7: Dead volume

With parameter C86 the size of the dead volume is adjustable in % of the PID variable.
Usually this finds application with phased PID controllers (relays), in order to obtain a minimum switch-on time. At C88 = 1 (differential PID) a pseudo hysteresis can be realised this way. This leads to a decrease in the switching frequency, if actual value ~ setpoint. For C88 = 2 the dead volume is made available at the analogue output as well (fig. 7).

C87: Function PID control circuit at sensor error
In the case a sensor error, the PID variable automatically goes to the condition set here.

C88: PID mode
Switching between PID standard (C88=0) and PID differential (C88=1).

<u>PID differential:</u> The differential mode is particularly suitable for the use of control valves (e.g. K1=OPEN, K2=CLOSED). As long as the value computed by the PID circuit remains constant, both exits remain inactive, i.e. the valve stops at the current position.

	PID standard (C88=0)				**PID differential (C88=1)**		
	PID	K1: heating	K2: cooling		DiffPID	K1: heating	K2: cooling
1	20%	20%	0%		+20%	20%	0%
2	25%	25%	0%		+5%	5%	0%
3	25%	25%	0%		±0	0%	0%
4	10%	10%	0%		-15%	0%	15%
5	-20%	0%	20%		-30%	0%	30%

Thus, control valves almost show the same controlling results as analogue valves. The table shows the different behaviour of both modes within the same control system.

C89: Cycle time control valve (DiffPID)
This parameter sets the time the control valve needs to go from 0% to 100%.
If C88=1, the PID variable is converted to this interval. The PID cycle time (C85) remains unaffected by this. When this time is defined, indication with a rounded up value in seconds is recommended.
Furthermore C85 should be > = C89.
At ± 100% the respective exit remains durably active (synchronisation).

C99: Password
This parameter is to set the password for the C—level.

b-level (between)

This level contains the parameters for different combinations.

Para-meter	Function	Adjustment range	Standard setting	Custom setting
b1	Activation setpoint combination for thermostat 1 and 2 (deltaW2)	0: no combination 1: Setpoint thermostat 2 = C1/C2 + C23	0	
b2	Activation setpoint combination for thermostat 1 and 3 (deltaW3)	0: no combination 1: setpoint thermostat 3 = C1/C2 + C43	0	
b11	Delay control circuit 1, 2, 3 after "Power-On"	0...400 sec.	0 sec.	
b12	Mutual delay control circuit 1, 2, 3	0...400 sec.	0 sec.	
b13	Alarm suppression after "Power-On", "setpoint"	0...60 min.	20 min.	
b21	Linkage analogue output	0: PID variable 1: actual value 2: setpoint	0	
b99	Password b-level	-99 ... 999	0	

Parameter description b-level:

b1: Activation setpoint combination for thermostat 1 and thermostat 2 (deltaW2)
This parameter determines whether the setpoints for thermostat 1 and 2 independently adjustable (parameter C21) or whether they are tied with one another via a switching offset deltaW2 (parameter C23).

b2: Activation setpoint combination for thermostat 1 and thermostat 3 (deltaW3)
This parameter determines whether the setpoints for thermostat 1 and 3 independently adjustable (parameter C41) or whether they are tied with one another via a switching offset deltaW2 (parameter C43).

b11: Delay control circuit 1, 2, 3 after "Power-On"
This parameter allows a switching-on delay of relays after switching-on the mains voltage. This delay corresponds with the time set here.

b12: Mutual delay control circuit 1, 2, 3
This parameter makes a mutual switching-on delay of relays possible, depending on whichever contact is switched first.

b13: Alarm suppression after "Power-On", "setpoint"
This parameter allows a switching-on delay of the alarm contact after switching on the mains voltage. This delay corresponds with the time set here.

b21: Linkage analogue output
This is to specify whether the analogue output carries the variable (PID), the actual value or the setpoint. The allocation of the output voltage (max. 0 ... 10.0V) in correspondence with the indicated value is effected via parameters A51 and A52. Output of voltages is always positive only.

b99: Password
This parameter is to set the password for the b—level.

H-level (hardware)

This level contains the hardware parameters.

Para-meter	Function	Adjustment range	Standard setting	Custom setting
H1	Key-lock	0: no key-lock 1: key-lock	0	
H11	Indication mode display 1	0: integrals 1: decimals in 0.5°K 2: decimals in 0.1°K 3: decimals in 0.01°K	2	
H12	Display 1 mode	1: actual value 2: setpoint 3: PID variable	0	
H15	Temperature scale	0: Celsius 1: Fahrenheit	0	
H16	Indication standby	0: display deactivated (point to the right) 1: AUS 2: OFF	1	
H17	Mode following "Power-On"	0: Off 1: On 2: Auto	1	
H31	Assigning function key 1	0: no function 1: standby key 2: setpoint 1 / setpoint 2 3: relay (H41…H44)	1	
H32	Assigning function key 2	0: no function 1: standby key 2: setpoint 1 / setpoint 2 3: relay (H41…H44)	2	
H35	Activation of key acknowledgement	0: no key acknowledgement 1: key acknowledgement with buzzer	0	
H41	Function output K1	0: no connection 1: thermostat 1 2: thermostat 2 3: thermostat 3 4: alarm function 5: PID-mode heating 6: PID-mode cooling 7: Function key 1 (H31>0) 8: Function key 2 (H32>0)	5	
H42	Function output K2	see H41	0	
H43	Function output K3	see H41	0	
H44	Function output K4	*see H41*	*0*	
H48	*Function hybrid output K1*			
H51	Mains frequency	0: 50Hz 1: 60Hz	0	
H99	Password H-level	-99..999	0	

Parameter description H-level:

H1: Key-lock
The key-lock allows blocking of the control keys. In locked condition parameter adjustments with keys is not possible. At the attempt to adjust the parameters despite key-lock the message "===" appears in the display.

H11: Indication mode display 1
The value can be indicated in integrals or with decimals in 0.5°K or 0.1°K. At indication in 0.5°K the value is rounded up or down. In general, all parameter indications are presented in 0.1°K.

H12: Display 1 mode
H12=1 indicates the actual value, H12=2 indicates the setpoint C1 or C2 and H12=3 statically indicates the PID variable in the display. Therefore, the current actual value can only be indicated with parameter A01.

H15: Temperature scale
Indication can be switched between Fahrenheit and Celsius. At conversion, the parameters and setpoints maintain their numerical value and adjustment range. (Example: A controller with the setpoint of 0°C is switched to Fahrenheit. The new setpoint is then interpreted as 0°F, which corresponds to a temperature of -18°C).
NOTE: Indication limits with °F can be smaller than the actual measuring range!

H16: Indication standby
In standby mode the here set value appears in the display.

H17: Mode following "Power-On"
After switching on the mains voltage the controller automatically goes to the condition set here. H17=2 applies to the condition prior to the separation from the net.

H31: Assigning function key 1
H32: Assigning function key 2
Setting =0 deactivates the key, =1 functions as standby key.
H31/H32 =2 thus allows to change between setpoint 1 (C1) and setpoint 2 (C2).
Setting =3 assigns the key to a relay specified with H41...H44

H35: Activation of key acknowledgement
This parameter permits to switch the internal buzzer on/off by key confirmation.

H41-44: Function output K1-4
H48: Function hybrid output K1 (H41, H43 ineffecitve)
Generally, the exits are exchangeable with parameter adjustments, in order to achieve an optimal relation of the existing hardware with regard to contact rating, kind of contact and cycle number. Therefore, these parameters first assign the exits to the controller function. Activation of H48 deactivates H41 and H43.

H51: Mains frequency
This parameter is to select the mains frequency.

H99: Password
This parameter is to adjust the password for the H—level.

d-level (defrosting functions)

This level contains the parameters for defrosting.

NOTE: Defrosting parameter only affects **control circuit 1**

Para-meter	Function	Adjustment range	Standard setting	Custom setting
d0	Defrosting interval TH1	1 ... 99h 0: no defrosting	0	
d2	Defrosting temperature TH1	-99.0 ... 999.0°C	10.0 °C	
d3	Defrosting time limit TH1	1 … 99 min. 0: no time limit	30 min.	
d9	Manual defrosting TH1	0...1	0	
d99	Password d-level	-99...999	0	

Parameter description d-level:

d0: Defrosting interval
The "defrosting interval" defines the time, after which a defrosting process is started. After each defrosting start, this time is reset and runs the next interval.

Manual defrosting:
Pressing the key UP for at least 3 sec. the defrosting interval is activated earlier. Alternatively parameter d9 can be applied for this function, too. The next automatic defrosting process takes place again after the time d0. (defrosting synchronisation)

d2: Defrosting temperature
This permits to terminate defrosting when the adjusted desired temperature value is reached. The defrosting time set with "d3" nevertheless runs at the same time, i.e. it functions as safety net to terminate the defrosting process in case the defrosting temperature is not reached.

d3: Defrosting time limit
After the here set time the defrosting process is terminated.

d9: Defrosting time limit
At change of 0 - > 1 the defrosting process is started and the defrosting interval is re-set. (defrosting synchronisation)

d99: Password
This parameter is to set the password for the d-level.

A-level (analogue values)

This level contains the parameters for analogue inputs and outputs.

Para-meter	Function	Adjustment range	Standard setting	Custom setting
A1	Indication of actual value analogue input	-		
A2	Actual value correction analogue input	-99.0 ... 99.9 °K	0 °K	
A3	Weighing factor analogue input (without U, I-entrance)	0.50 ... 1.50	1.00	
A4	Sensor type	1: Thermo element type J 2: Thermo element type K 11: Pt100 two-wire 12: Pt100 three-wire 13: Pt1000 two-wire 14: Pt1000 three-wire 21: KTY81-121 two-wire 31: Voltage input 0...10V 32: Voltage input 2...10V 41: Current input 0...20mA 42: Current input 4...20mA	12	
A5	Indication value for lower value linear analogue input	-99.0 ... 999.0	0.0	
A6	Indication value for upper value linear analogue input	-99.0 ... 999.0	100.0	
A40	Time constant of the software filter	0: not active, average value with 1: 2 measuring values (2*X s) 2: 4 measuring values (4*X s) 3: 8 measuring values (8*X s) 4: 16 measuring values (16*X s) 5: 32 measuring values (32*X s) 6: 64 measuring values (64*X s) 7: 128 measuring values (128*X s)	2	
A50	Indication of the PID variable	-		
A51	Indication value for lower value at analogue output (0V/0mA)	-99.0 … (A52-0.5) 0V if sensor error (b21 = 1)	0.0	
A52	Indication value for upper value at analogue output (10V/20mA)	(A51+0.5) … 999.0	100.0	
A53	Indication value full cooling performance (-100.0..0%)	0 ... 10.0 (10 corresponds 10V or 20mA)	0.0	
A54	Indication value "0" performance	0 ... 10.0 (10 corresponds 10V or 20mA)	0.0	
A55	Indication value full heating performance (0..100.0%)	0 ... 10.0 (10 corresponds 10V or 20mA)	10.0	
A99	Password A-level	-99 ... 999	0	

Parameter description A-level:

A1: Indication of actual value analogue input
The here indicted temperature value is the sum of the actual measured value of sensor F1 and the actual value correction according to parameter A2.

A2: Actual value correction analogue input
With this parameter it is possible to correct actual value deviations caused by sensor tolerances or extremely long sensor lines for example. The control measuring value is increased or decreased by the here set value.

A3: Weighing factor analogue input (without U, I-entrance)
With this parameter the actual value can be submitted to weighing. The measured value is multiplied by it and both indicated in the display and applied for regulation.

A4: Analogue input type
These parameters permit selection of the sensor type, respectively the type of analogue input if the needed hardware prerequisites are available.

A5: Indication value for lower value linear analogue input
A6: Indication value for upper value linear analogue input
These parameters allow scaling of the linear analogue input. The value to be indicated for the lower and upper input value then defines the range the controller will indicate.

A40: Time constant of the software filter
With several measuring values, it is possible to obtain an average value. If a sensor with a very fast reaction to external influences is used, an average value ensures a calm signal process.

A50: Indication of the PID variable
Indication of the internally computed PID variable from -100%... 100%.

A51: Indication value for lower value at analogue output (0V)
A52: Indication value for upper value at analogue output (10V)
Indication of the actual value (see b21) is subject to the following range adjustment:
If the indication value reaches the value set in A51, voltage is 0 V.
If the indication value reaches the value set in A52, voltage is 10 V.

A53: Indication value full cooling performance (-100.0..0%)
A54: Indication value "0" performance
A55: Indication value full heating performance (0..100.0%)
Indication of the actual value (see b21) is subject to the following range adjustment:
If cooling is to be performed with 100% cooling performance, voltage is as set in A53.
If neither heating nor cooling is required, tension is as set in A54.
If heating is to be performed with 100 % heating performance, voltage is as set in A55.

A99: Password
This parameter permits setting of the password for the A-level.

Status indications and error messages

Message	Cause	Error elimination
F 1_	Sensor error (H: open-circuit or L: short-circuit at sensor F1)	Check sensor
F 2_	Sensor error (H: open-circuit or L: short-circuit at 3-wire correction	Check sensor
E P_	0: Error program memory 1: Error parameter memory **=> ALL EXITS WILL BE SWITCHED OFF**	Repair controller
---	Display overrun or key-lock	
flashing indication	Temperature alarm at too high or too low temperatur (if activated)	

If an error is recognised in the parameter memory (indication EP) and therefore the saved settings cannot to be used, relays are set out of power supply.

Technical data of ST710-PNUV.102

Measuring input:
F1: Temperature sensor, choose of following types:

	Measuring range:
Thermocouple type J:	-99°C...+999°C (clamp compensation 25,0°C)
Thermocouple type K:	-99°C...+999°C (clamp compensation 25,0°C)
Pt100-2:	-99°C...+580°C
Pt100-3:	-99°C...+450°C (max. 2x 20R resistance for the cable)
Pt1000-2:	-99°C...+400°C
Pt1000-3:	-99°C...+400°C (max. 2x 20R resistance for the cable)
PTC:	-50°C...+150°C

U(0-10V):	-0.1V...10.1V	U(2-10V):	1.5V...10.1V
I(0-20mA):	-0.1mA…20.1mA	I(4-20mA):	3.5mA…20.1mA

Input resistance for voltage input (Pin 8+ against Pin 9-): >10 kOhm
Input resistance for current input (Pin6+ against Pin 7-): ca. 31,6 Ohm

Measuring accuracy at 25°C: +/- 0,5% of scale range

Outputs
S1: Voltage 0/+12V, to control an external semiconductor relay (SSR)
K2: Relay, normally-open contact, 8(1.5)A 24V, permanent current max. 4A
K3: Relay, normally-open contact, 8(1.5)A 24V, permanent current max. 4A
K4: Relay, change-over contact, 8(1.5)A 24V, permanent current max. 4A
Linear analogue output with 0-10V range, adjustable via parameters

Installed buzzer, ca. 85dB

Display
One 4-digit LED-Display, height 13mm, for temperature display, colour red, with decimal point
Three LEDs, diameter 3mm, for status display of the outputs K1, K2 and K3.

Power supply
12-24V~ or 16-36V=, power consumption max. 3VA

Connectors
Plug and socket
Terminal A: 12-pole, spacing 5.0 mm, for cable up to 2.5 mm²
Terminal B: 11-pole, spacing 3.5 mm, for cable up to 1.5 mm²

Ambient conditions:

Storage temperature	-20°C...+70°C
Operating temperature	0...55°C
Relative humidity	max. 75%, without dew

Weight
ca. 150g

Enclosure
Front IP65, IP00 from behind

Installation data

The unit is to be installed in an instrument panel.

Front size:	84 x 42 mm
Panel cut-out:	67.2 x 31.2 mm
Installation depth:	ca. 90 mm

Mounting by fixing strap