ST46-31

Limit value indicator

Order number 900237.002

As of: 10.12.2020, Software V1.08

Wiring diagram

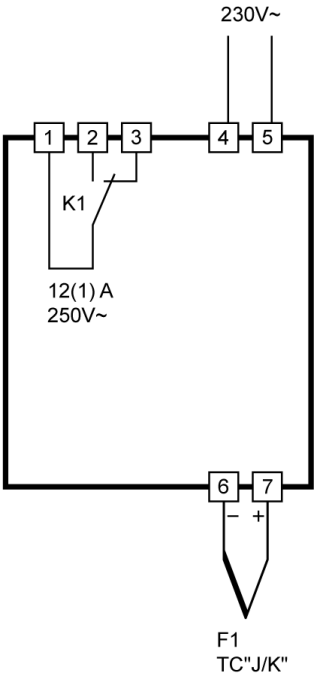

Product description

The controller ST46-31 J/K with limit value indicator is designed for DIN-rail mounting, which allows easy installation in the switch cabinet. The setpoint and all parameters of the controller are set by means of the three operating keys. The controller is supplied with a voltage of 230V AC. The built-in relay has an ohmic load capacity of 12A.

Sensor: Thermo couple J/K
Measuring range: Type J -99...700°C
Measuring range: Type K -99...999°C
Housing (L x W x H): 95 x 53 x 59 mm
Installation: Snap-on mounting on standard rail 35 x 7.5mm
Connector: screw terminal

ST 46...

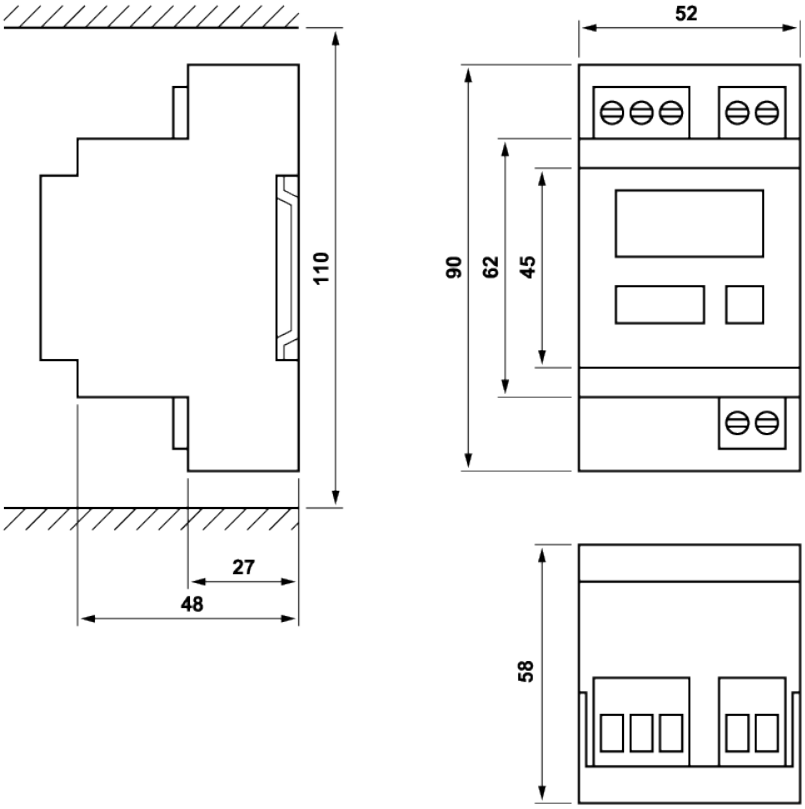

SOFTWARE .100

Adjustment options

Key UP
Pressing this key, you can increase the parameter or parameter value or scroll the parameter list.

Key DOWN
Pressing this key, you can decrease the parameter or parameter value or scroll the parameter list. At alarm the buzzer function can be switched off with this key.

Key SET
Holding this key, the setpoint is indicated.
Additionally, this key is used for setting parameters.

First control level:

Parameter setting of the control setpoint

The setpoint C1 can be selected by pressing the **'SET'** - key.
By additionally pressing the **'UP'**- or **'DOWN'**- key it can be adjusted.

Para-meter	Function description	Adjustment range	Standard setting	Custom setting
C1	Setpoint 1 for control circuit 1 and/or PID-control	C10...C11	0.0 °C	
C2	Setpoint 2 for control circuit 1 (*)	C10...C11	0.0 °C	

* The activation of the 2nd setpoint **C2** is indicated in the display by a flashing point on the right. **C2** can be activated with the switching input.

Software version
Die Version number of the software can be requested by simultaneously pressing keys **'SET'** + **'UP'** + **'DOWN'**.

Menu level

By simultaneously pressing the **UP** and **DOWN** key for at least 4 seconds, the controller changes to menu level. It consists of several sub-menus listed by the respective initial letter followed by 2 lines (e.g. C -- for the C-level).

Parameter	Untermenü	Funktion
USr	Limiter reset level	Cancel limiter lock state and password setting
C--	Controller level	Application parameters
b--	Between level	Connecting parameters
H--	Hardware level	Hardware parameters
d--	Defrost level	Defrosting parameters (control circuit 1)
A--	Analogue level	Parameter for analogue in- and outputs

Adjustment of control parameters

To activate parameterisation mode, press buttons **UP** and **DOWN** at the same time. After approx. 3 seconds, the code word **USr** will be displayed. Press **UP** or **DOWN** to switch between parameter levels.

Pressing the **SET** key will ask for the password of the respective level. This password must be set by additionally pressing the **UP** or **DOWN** key.
(Default value for USr-level = -1 , all other levels have the default value = 0 , i.e. a jump to these levels is made without password entry).

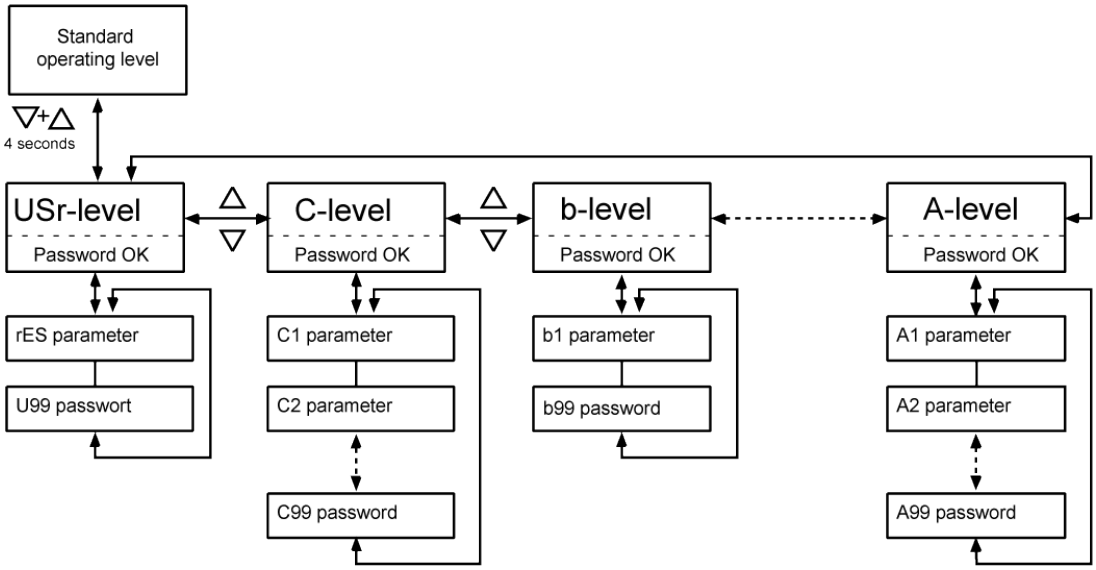

The last parameter of the respective sub-menu (e.g. C99, b99...) corresponds to the current password of this level and can be changed there.

NOTE: Forgetting the password requires sending the controller to Störk-Tronic.

If the password is correct, the display jumps to the sub-menu and shows the first listed parameters when the set key is released. Pressing the SET key, the value of the selected parameter is indicated. Additionally, pressing the UP or DOWN key, the value can be adjusted. Releasing all keys, the new value is saved long term.
If UP and DOWN keys are simultaneously pressed again for at least 4 seconds, the display switches to the menu level again. Upon repeated pressing for 4 seconds or no pressing of any key for more than 60 seconds, the system jumps back to the initial state.

Controller structure

Block diagram of the controller structure. With the different parameters (H41...H44) a specific control function can be assigned to each output. Every control module is configured by the respective parameter.

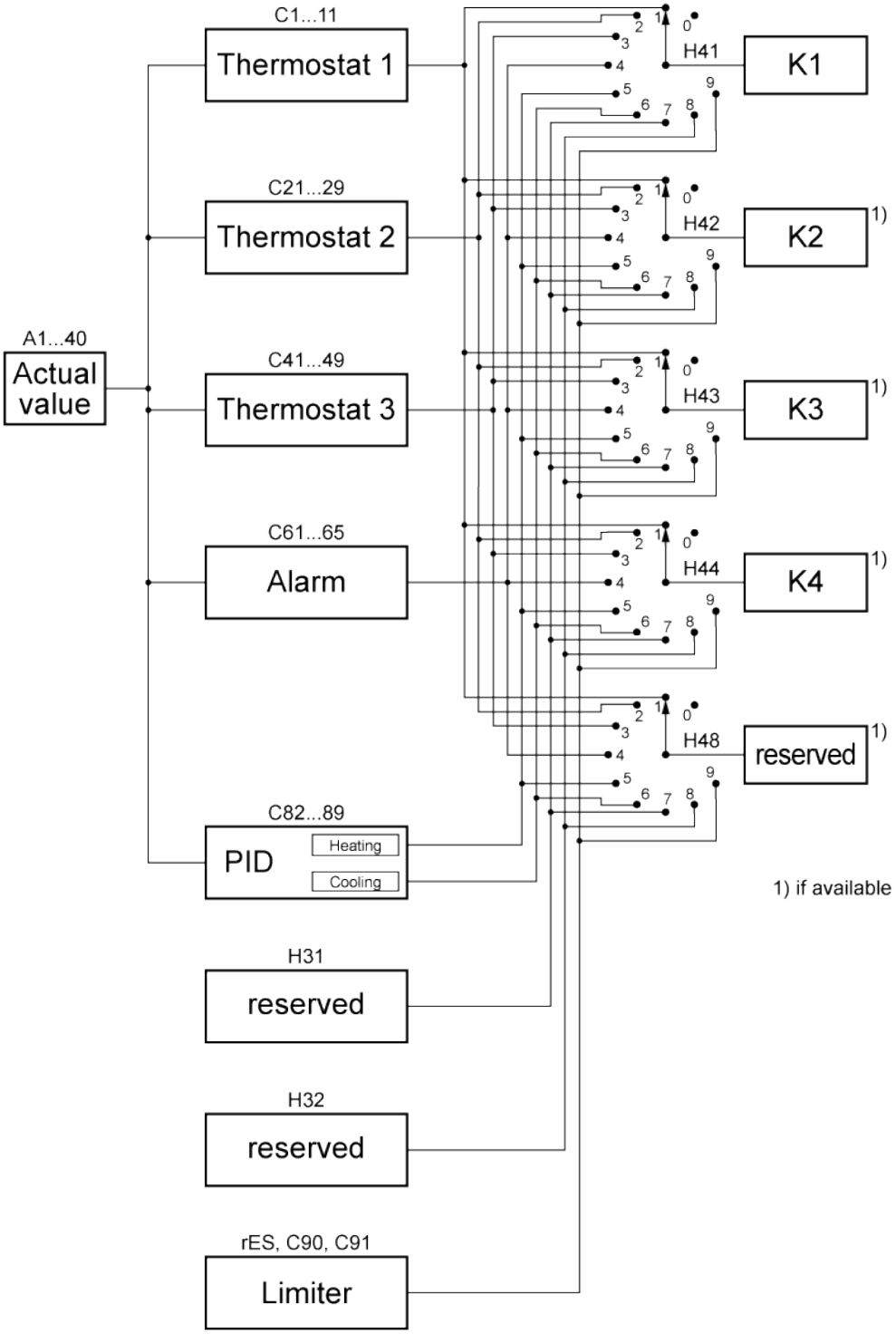

The USr level (limiter)

Limiter

Para-meter	Function	Adjustment range	Standard setting	Custom setting
rES	LockState and reset	1 -> 0*	**	
U99	Password USr level	-99…999	-1	

Note on * and **:

If the limit value according to parameter C90 is reached or exceeded, the lock state is activated.

In the lock state applies:
- Parameter rES = 1
- Display indication: Flashing, alternating actual value and error text "bEG".
- LED1 flashes
- Buzzer activated (if available)
- Relay contacts which are linked to the limiter via H41 to H44 are open

The lock state cannot be forced by the user, i.e. the user cannot set the parameter rES from 0 to 1.

The user can disable the lock state if the following condition is met
- The actual value is below the release threshold according to C91.

If this condition is fulfilled, the user can set the parameter rES from 1 to 0 to deactivate the lock state.

In the non-active lock state applies:
- Parameter rES = 0
- The display shows the actual value
- LED1 is switched off
- Buzzer deactivated
- Relay contacts linked to the limiter via H41 to H44 are closed

If the power supply is interrupted, the lock status is cancelled.

The C-level (controller)

This level contains the application parameters.

Thermostat 1

Para-meter	Function	Adjustment range	Standard setting	Custom setting
C1	Setpoint control circuit 1	-99 ... 999°C	0.0°C	
C2	Setpoint control circuit 1 (*)	-99.0 ... 99.0°K	0.0°C	
C3	Offset for C1/C2	-99.0 ... 99.0°K	0.0°K	
C4	Switching sense control circuit 1	0: heating function 1: cooling function	0	
C5	Hysteresis control circuit 1	0.1 ... 99.9°K	1.0°K	
C6	Hysteresis mode control circuit 1	0: symmetrical 1: one-sided	0	
C7	Minimum action time control circuit 1"ON"	0 ... 400 sec.	0 sec.	
C8	Minimum action time control circuit 1"OFF"	0 ... 400 sec.	0 sec.	
C9	Function control circuit 1 at sensor error	0: relay off 1: relay on	0	
C10	Control range limitation, minimum Setpoint 1	-99.0°C ... C11	145 °C	
C11	Control range limitation, maximum Setpoint 1	C10 ... 999.0°C	195°C	

* The activation of the second desired value C2 is indicated on the display with a flashing point to the right. It can be activated via switching entrance (if available).

Thermostat 2

Para-meter	Function	Adjustment range	Standard setting	Custom setting
C21	Setpoint control circuit 2 (b1=0)	-99...999°C	0°C	
C23	Delta W2 (b1=1)	-99...99°K	0°K	
C24	Switching sense control circuit 2	0: heating function 1: cooling function	0	
C25	Hysteresis control circuit 2	0.1 ... 99.9°K	1°K	
C26	Hysteresis mode control circuit 2	0: symmetrical 1: one-sided	0	
C27	Minimum action time control circuit 2 "ON"	0...400 sec.	0 sec.	
C28	Minimum action time control circuit 2 "OFF""	0...400 sec.	0 sec.	
C29	Function control circuit 2 at sensor error	0: relay off 1: relay on	0	
C30	Control range limitation, minimum Setpoint 2	-99.0°C ... C31	-99,0°C	
C31	Control range limitation, maximum Setpoint 2	C30 ... 999.0°C	999 °C	

Thermostat 3

Para-meter	Function	Adjustment range	Standard setting	Custom setting
C41	Setpoint control circuit 3 (b2=0)	-99...999°C	0.0°C	
C43	Delta W3 (b2=1)	-99.0 ... 99.0°K	0.0°K	
C44	Switching sense control circuit 3	0: heating function 1: cooling function	0	
C45	Hysteresis control circuit 3	0.1 ... 99.9°K	1.0°K	
C46	Hysteresis mode control circuit 3	0: symmetrical 1: one-sided	0	
C47	Minimum action time control circuit 3 "ON"	0...400 sec.	0 sec.	
C48	Minimum action time control circuit 3 "OFF""	0...400 sec.	0 sec.	
C49	Function control circuit 3 at sensor error	0: relay off 1: relay on	0	
C50	Control range limitation, minimum Setpoint 3	-99.0°C ... C51	-99,0°C	
C51	Control range limitation, maximum Setpoint 3	C50 ... 999.0°C	999 °C	

Alarm circuit

Para-meter	Function	Adjustment range	Standard setting	Custom setting
C61	Lower alarm value	-99.0 ... C62	-99.0	
C62	Upper alarm value	C61 ... 999.0	999	
C63	Alarm functions	0: Boundary alarm, relative boundaries 1: Boundary alarm, absolute boundaries 2: Range alarm, relative boundaries 3: Range alarm, absolute boundaries 4: Boundary alarm, relative boundaries, alarm inverse 5: Boundary alarm, absolute boundaries, alarm inverse 6: Range alarm, relative boundaries, alarm inverse 7: Range alarm, absolute boundaries, alarm inverse	0	
C64	Special function at boundary alarm	0: not active 1: flashing display 2: buzzer 3: buzzer + flashing display 4: like 3, buzzer can be cancelled 5: like 4, restarts after 10 min. 6: like 4, restarts after 30 min.	4	
C65	Hysteresis alarm circuit	0.1 ... 99.9°K	1 K	

PID control

Para-meter	Function	Adjustment range	Standard setting	Custom setting
C82	Proportional area at PID control	0.1 … 999.0°K	10°K	
C83	Reset time at PID control (I-portion)	0...999 sec., 0: inactive	500 sec.	
C84	Lead time at PID control (D-portion)	0...999 sec., 0: inactive	50 sec.	
C85	Cycle time at PID control	2...100 sec.	8 sec.	
C86	Control variable dead volume	0.0 … 100.0%	0.0%	
C87	Function PID control circuit at sensor error	-100.0% ... 0 ... 100.0%	0.0%	
C88	PID-mode	0: PID 1: DiffPID (2 relays – heating, cooling) 2: PID with dead volume at analogue exit	0	
C89	Cycle time motor valve (Differential PID)	2...100 sec.	8 sec.	

Limiter parameter

Para-meter	Function	Adjustment range	Standard setting	Custom setting
C90	Limit	C10 … C11	195 °C	
C91	Release threshold	C10 … C11	145 °C	

Password

Para-meter	Function	Adjustment range	Standard setting	Custom setting
C99	Password C-level	-99…999	89	

Parameter description C-level:

Thermostat-1

C1: Setpoint control circuit 1
This value corresponds with the setpoint set at the first control level (see C2).

C2: Setpoint control circuit 1
Setpoint C2 can only be displayed with the **'SET'**- key, if input **E1** is closed.

C3: Offset for C1/C2
This adjusted value will build the difference to the setpoint for control circuit 1, i.e. there is no regulation according to the pre-set value, but according to the sum of desired value and the value of **C3**.

C4: Switching sense control circuit 1
The switching sense for the relays, i.e. cooling or heating function, can be programmed independently. Heating function means that the contact falls as soon as the pre-set setpoint is reached, thus power interruption. At cooling function, the contact only tightens, if the actual value is above the required setpoint.

C5: Hysteresis control circuit 1
The hysteresis can be set symmetrically or one-sided at the desired value (see **C6**). At one-sided setting, the hysteresis works downward with heating contact and upward with cooling contact. At symmetrical hysteresis, half of the hysteresis' value is effective below and half of the value above the switching point (see fig. 1 and 2).

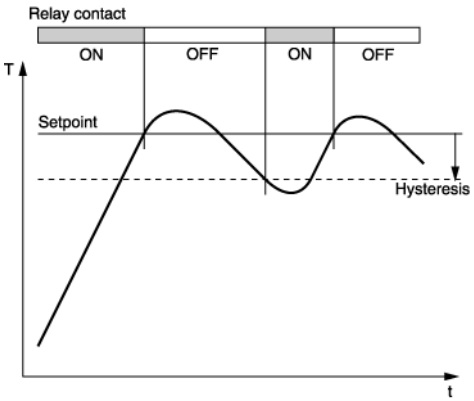

Fig. 1: Heating controller, one-sided hysteresis

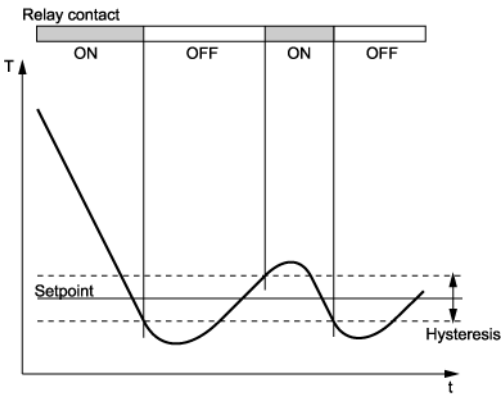

Fig. 2: Cooling controller, symmetrical hysteresis

C6: Hysteresis mode control circuit 1
This parameter allows selection as to whether the hysteresis values which are adjustable with **C5** are set symmetrically or one-sided at the respective switching point. At symmetrical hysteresis, half of the hysteresis' value is effective below and half of the value above the switching point. The one-sided hysteresis works downward with heating contact and upward with cooling contact.

C7/C8: Minimum action time control circuit 1 "On"/"Off"
These parameters permit a delay in switching on/off the relay in order to reduce the switching frequency. The adjusted time sets the entire minimum time period for a switching-on or switching-off phase.

C9: Function control circuit 1 at sensor error
At sensor error the selected relay (see **H41**… **43**) falls back into the condition pre-set here.

C10: Setpoint limit (minimum) setpoint 1
C11: Setpoint limit (maximum) setpoint 1
The adjustment range of the setpoint can be limited in both directions. This is to prevent the end user of a unit from setting inadmissible or dangerous setpoints.

Thermostat-2

C21: Setpoint control circuit 2 (thermostat) (b1=0)
If **b1**=1, this value is ineffective.

C23: Value deltaW2 (b1=1)
If **b1**=1, the setpoints for control circuit 1 and 2 are linked with one another via switching difference deltaW2 (**C23**) (operation with deltaW).
The following applies: Setpoint thermostat 2 = setpoint control circuit 1 (**C1/C2**) + deltaW2.
This difference can take positive or negative values. Thus, a leading or following contact can be realised.

C24: Switching sense control circuit 2
The switching sense for the relays, i.e. cooling or heating function, can be programmed independently at works. Heating function means that the contact falls as soon as the pre-set setpoint is reached, thus power interruption. At cooling function, the contact only tightens, when the actual value is above the required setpoint.

C25: Hysteresis control circuit 2
The hysteresis can be set symmetrically or one-sided at the setpoint (see **C26**). At one-sided setting, the hysteresis works downward with heating contact and upward with cooling contact. At symmetrical hysteresis, half of the hysteresis' value is effective below and half of the value above the switching point (see fig. 1 and 2).

C26: Hysteresis mode control circuit 2
This parameter allows selection as to whether the hysteresis values which are adjustable with **C25** are set symmetrically or one-sided at the respective switching point.
At symmetrical hysteresis, half of the hysteresis' value is effective below and half of the value above the switching point. The one-sided hysteresis works downward with heating contact and upward with cooling contact.

C27: Minimum action time control circuit 2 "On"
C28: Minimum action time control circuit 2 "Off"
These parameters permit a delay in switching on/off the relay, in order to reduce the switching frequency. The adjusted time sets the entire minimum time period for a switching-on or switching-off phase.

C29: Function control circuit 2 at sensor error
At sensor error the selected relay (see **H41… 43**) falls back into the condition pre-set here.

C30: Setpoint limit (minimum) setpoint 2
C31: Setpoint limit (maximum) setpoint 2
The adjustment range of the setpoint can be limited in both directions. This is to prevent the end user of a unit from setting inadmissible or dangerous setpoints.

Thermostat-3

C41: Setpoint thermostat 3 (b2=0)
If b2=1, this value is ineffective.

C43: Value deltaW3 (b2=1)
If **b2**=1, the setpoints for thermostat 1 and 3 are linked with one another via switching difference deltaW3 (operation with deltaW). The following applies:
Setpoint thermostat 3 = setpoint thermostat 1 (**C1/C2**) + deltaW3.
This difference can take positive or negative values. Thus, a leading or following contact can be realised.

C44: Switching sense control circuit 3
The switching sense for the relays, i.e. cooling or heating function, can be programmed independently at works. Heating function means that the contact falls as soon as the pre-set setpoint is reached, thus power interruption. At cooling function, the contact only tightens, if the actual value is above the required setpoint.

C45: Hysteresis control circuit 3
The hysteresis can be set symmetrically or one-sided at the setpoint (see **C46**). At one-sided setting, the hysteresis works downward with heating contact and upward with cooling contact. At symmetrical hysteresis, half of the hysteresis' value is effective below and half of the value above the switching point (see fig. 1 and 2).

C46: Hysteresis mode control circuit 3
This parameter allows selection as to whether the hysteresis values which are adjustable with **C45** are set symmetrically or one-sided at the respective switching point.
At symmetrical hysteresis, half of the hysteresis' value is effective below and half of the value above the switching point. The one-sided hysteresis works downward with heating contact and upward with cooling contact.

C47: Minimum action time control circuit 3 "On"
C48: Minimum action time control circuit 3 "Off"
These parameters permit a delay in switching on/off the relay in order to reduce the switching frequency. The adjusted time sets the entire minimum time period for a switching-on or switching-off phase.

C49: Function control circuit 3 at sensor error
At sensor error the selected relay (see **H41… 43**) falls back into the condition pre-set here.

C50: Setpoint limit (minimum) setpoint 3
C51: Setpoint limit (maximum) setpoint 3
The adjustment range of the setpoint can be limited in both directions. This is to prevent the end user of a unit from setting inadmissible or dangerous setpoints.

Alarm functions

C61: Lower alarm value
C62: Upper alarm value
The exit alarm is a boundary alarm or a range alarm with one-sided hysteresis (see parameter **C65**). Both at the boundary alarm and the range alarm, limit values can be relative, i.e. going along with the setpoint **C1/C2**, or absolute, i.e. independent of the setpoint **C1/C2**. At boundary alarm the hysteresis works one-sided inwardly, and at range alarm outwardly (see fig. 3-6 below).

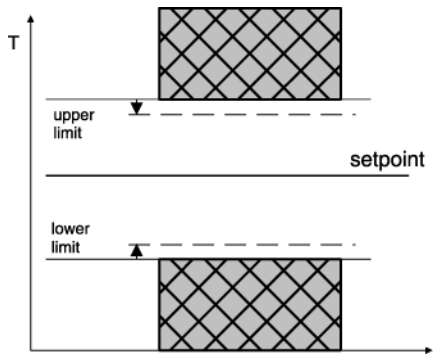

Fig. 3: Boundary alarm, alarm contact normal
C63=0 limits relative
C63=2 limits relative

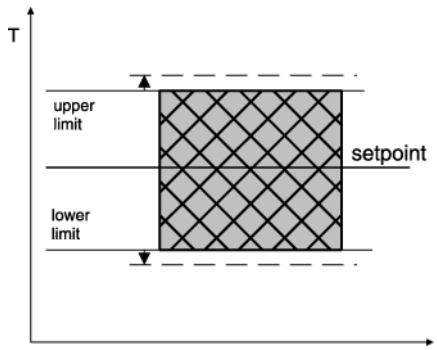

Fig. 4: Range alarm, alarm contact normal
C63=2 limits relative
C63=2 limits relative

-

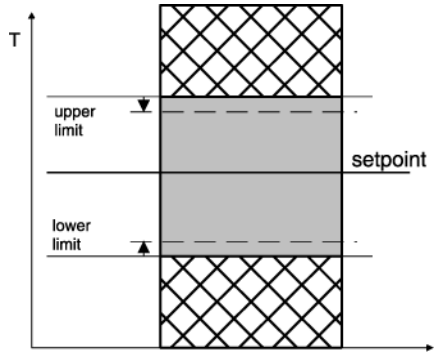

Fig. 5: Boundary alarm, alarm contact inverse
C63=4 limits relative
C63=5 limits absolute

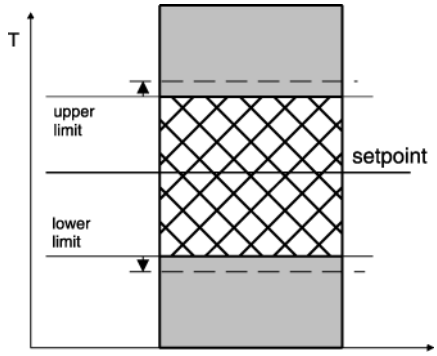

Fig. 6: Range alarm, alarm contact inverse
C63=6 limits relative
C63=7 limits absolute

C63: Function exit alarm
The exit alarm evaluates an upper and a lower limit value (see parameters **C61** and **C62**), whereas a selection is possible as to whether the alarm is active if the temperature lies within these two limits, or whether the alarm is released if the temperature lies beyond them. In the case of sensor error, the alarm is activated independently of this adjustment. The exit can also be inverted, so that it functions like a release (see fig. 3 – 6).

C64: Special function at alarm
Here can be selected whether, in case of an emergency, the display flashes and/or the buzzer is to start.
Attention: Switching off the alarm buzzer with the **DOWN** key is only possible if **C64** > 3.

Sensor alarm (display **F1L** or **F1H**) is indicated independently thereof by a flashing display and the buzzer. In this case the buzzer can always be switched off with the **DOWN** key. However, it starts again after 10 minutes if the error is still valid.

C65: Hysteresis alarm circuit
Hysteresis is set one-sided at the adjusted limit value. It becomes effective depending on alarm definition (see fig. 3-6).

PID - control

C82: Proportional band at PID regulation
The proportional band works in such a way that with approximation of the actual value to the setpoint the variable is reduced linearly from +-100% to 0%.

C83: Reset time at PID regulation (I-portion)
C84: Lead time at PID regulation (D-portion)
The proportional controller as such has a remaining deviation of the actual value from the setpoint. The integral portion provides for a complete compensation of this offset.
The reset time is a measure for the period of time needed to adjust a remaining temperature deviation of the size of the proportional range.
If a small reset time is set, a fast post-adjustment will take place. At a too small reset time, however, the system may tend to vibrate.
The differential portion dampens temperature changes.
If lead time is set for long, damping is strong. At too long lead time, however, the system may tend to vibrate.
At setting 0 the values are ineffective. It is therefore possible to realise a pure PI or PD regulation.

C85: Cycle time at PID regulation
During the cycle time the control exit runs through one switching period, i.e. once switched out and once switched on. The smaller the cycle time, the faster the regulation. By consequence, however, there is also an increased switching frequency of the output, which can lead to rapid wear of relay contacts. For very fast control ways with the respective high switching frequency a voltage output is therefore of advantage.

C86: Control variable dead volume

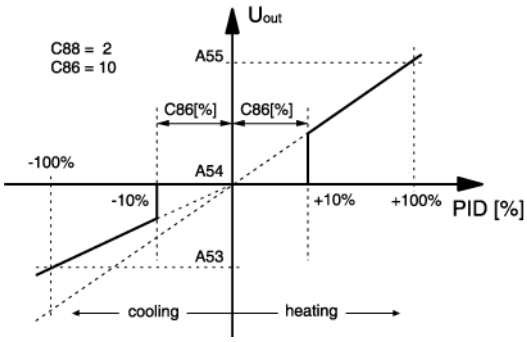

With parameter C86 the size of the dead volume is adjustable in % of the PID variable.
Usually this finds application with phased PID controllers (relays), in order to obtain a minimum switch-on time. At C88 = 1 (differential PID) a pseudo hysteresis can be realised this way. This leads to a decrease in the switching frequency, if actual value ~ setpoint. For C88 = 2 the dead volume is made available at the analogue output as well (fig. 7).

C87: Function PID control circuit at sensor error
In the case a sensor error, the PID variable automatically goes to the condition set here.

C88: PID-Mode
[C88 = 0] PID standard
[C88 = 1] PID differential (see below)
[C88 = 2] PID standard with dead volume at analogue exit

PID differential: The differential mode is particularly suitable for the use of control valves (e.g. K1=OPEN, K2=CLOSED). As long as the value computed by the PID circuit remains constant, both exits remain inactive, i.e. the valve stops at the current position.

	PID standard (C88=0/2)				PID differential (C88=1)		
	PID	K1: heating	K2: cooling		DiffPID	K1: heating	K2: cooling
1	20%	20%	0%		+20%	20%	0%
2	25%	25%	0%		+5%	5%	0%
3	25%	25%	0%		±0	0%	0%
4	10%	10%	0%		-15%	0%	15%
5	-20%	0%	20%		-30%	0%	30%

Thus, control valves almost show the same controlling results as analogue valves. The table shows the different behaviour of both modes within the same control system.

C89: Cycle time control valve (DiffPID)
This parameter sets the time the control valve needs to go from 0% to 100%.
If **C88**=1, the PID variable is converted to this interval. The PID cycle time (**C85**) remains unaffected by this.
When this time is defined, indication with a rounded-up value in seconds is recommended.
Furthermore, **C85** should be > = **C89**.
At ± 100% the respective exit remains durably active (synchronisation).

C90: Limit
C91: Release threshold
See chapter „The USr level Limiter“

C99: Password
This parameter is to set the password for the C—level.

Autotuning of the PID control circuit
The autotuning is supposed to adjust and optimize the control behaviour to the controlled system. The following is to be noticed:

- The autotuning affects only the heating circuit. Before the tuning process at least one output relay (K1…K4) has to be set to “heating” with parameters H41 ... H44 = 5.
- The setpoint must be at least 20K more than the actual value, otherwise **“----“** is displayed (for 2 sec.) and autotuning will not start.
- During the tuning process the display alternates between the normally displayed value (i.e. the actual value) and **“Auto”** (the process can last for more than 1 hour).
- The tuning process changes parameters C82, C83, C84, C85.
- After a power failure or after switching to standby mode **before end of tuning**, a new start of the tuning process is necessary. The abovementioned parameters have been changed
- Adjusting the setpoint requires a new tuning process.
- Potentially you have to adjust manually the above mentioned parameters C82, C83, C84, C85 after the autotuning.

b-level (between)

This level contains the parameters for different combinations.

Para-meter	Function	Adjustment range	Standard setting	Custom setting
b1	Activation setpoint combination for thermostat 1 and 2 (deltaW2)	0: no combination 1: Setpoint thermostat 2 = C1/C2 + C23	0	
b2	Activation setpoint combination for thermostat 1 and 3 (deltaW3)	0: no combination 1: setpoint thermostat 3 = C1/C2 + C43	0	
b11	Delay control circuit 1, 2, 3 after "Power-On"	0...400 sec.	0 sec.	
b12	Mutual delay control circuit 1, 2, 3	0...400 sec.	0 sec.	
b13	Alarm suppression after "Power-On", "setpoint"	0...60 min.	20 min.	
b21	Linkage analogue output	0: regulating variable 1: actual value 2: setpoint	0	
b99	Password b-level	-99 ... 999	89	

Parameter description b-level:

b1: Activation setpoint combination for thermostat 1 and thermostat 2 (deltaW2)
This parameter determines whether the setpoints for thermostat 1 and 2 independently adjustable (parameter C21) or whether they are tied with one another via a switching offset deltaW2 (parameter C23).

b2: Activation setpoint combination for thermostat 1 and thermostat 3 (deltaW3)
This parameter determines whether the setpoints for thermostat 1 and 3 independently adjustable (parameter C41) or whether they are tied with one another via a switching offset deltaW2 (parameter C43).

b11: Delay control circuit 1, 2, 3 after "Power-On"
This parameter allows a switching-on delay of relays after switching-on the mains voltage. This delay corresponds with the time set here.

b12: Mutual delay control circuit 1, 2, 3
This parameter makes a mutual switching-on delay of relays possible, depending on whichever contact is switched first.

b13: Alarm suppression after "Power-On", "setpoint"
This parameter allows a switching-on delay of the alarm contact after switching on the mains voltage. This delay corresponds with the time set here.
Attention: Sensor errors are always indicated **instantly**, despite alarm suppression.

b21: Linkage analogue output
This is to specify whether the analogue output carries the regulating variable (PID), the actual value or the setpoint. The allocation of the output voltage (max. 0 ... 10.0V) in correspondence with the indicated value is affected via parameters **A51** and **A52**. Output of voltages is always positive only.

b99: Password
This parameter is to set the password for the b—level.

H-level (hardware)

This level contains the hardware parameters.

Para-meter	Function	Adjustment range	Standard setting	Custom setting
H1	Key-lock	0: no key-lock 1: key-lock	0	
H11	Indication mode display 1	0: integrals 1: decimals in 0.5°K 2: decimals in 0.1°K 3: decimals in 0.01°K	2	
H12	Display 1 mode	1: actual value 2: setpoint 3: PID regulating variable	1	
H15	Temperature scale	0: Celsius 1: Fahrenheit	0	
H16	Indication standby	0: display deactivated (point to the right) 1: AUS 2: OFF	1	
H17	Mode following "Power-On"	0: Off 1: On 2: Auto	1	
H31	reserved			
H32	Reserved			
H35	Activation of key acknowledgement	0: no key acknowledgement 1: key acknowledgement with buzzer	0	
H41	Function output K1	0: no connection 1: thermostat 1 2: thermostat 2 3: thermostat 3 4: alarm function 5: PID-mode heating 6: PID-mode cooling 7: Function key 1 (H31>0) 8: Function key 2 (H32>0) 9: Limiter (Auto-reset after Mains On, T<C91) 10: Limiter (manual reset, T<C91)	9	
H42	Function output K2	see H41	0	
H43	Function output K3	see H41	0	
H44	Function output K4	*see H41*	0	
H48	reserved			
H51	Mains frequency	0: 50Hz 1: 60Hz	0	
L0	ST-Bus address	1 … 250	5	
H99	Password H- level	-99..999	89	

Parameter description H-level:

H1: Setpoint-lock
The key-lock allows blocking of the setpoint adjustment (C1 / C2). However, the parameters are indicated by pressing the **SET** key. And it is possible to change values within the parameter menu as usual.

H11: Indication mode display 1
The value can be indicated in integrals or with decimals in 0.5°K or 0.1°K. At indication in 0.5°K the value is rounded up or down. In general, all parameter indications are presented in 0.1°K.

H12: Display 1 mode
H12=1 indicates the actual value, H12=2 indicates the setpoint **C1** or **C2** and **H12**=3 statically indicates the PID variable in the display. Therefore, the current actual value can only be indicated with parameter **A01**.

H15: Temperature scale
Indication can be switched between Fahrenheit and Celsius. At conversion, the parameters and setpoints maintain their numerical value and adjustment range. (Example: A controller with the setpoint of 0°C is switched to Fahrenheit. The new setpoint is then interpreted as 0°F, which corresponds to a temperature of -18°C).
NOTE: Indication limits with °F can be smaller than the actual measuring range!

H16: Indication standby
In standby mode the here set value appears in the display.

H17: Mode following "Power-On"
After switching on the mains voltage, the controller automatically goes to the condition set here. H17=2 applies to the condition prior to the separation from the net.

H35: Activation of key acknowledgement
This parameter permits to switch the internal buzzer on/off by key confirmation.

H41-44: Function output K1-4
Generally, the exits are exchangeable with parameter adjustments, in order to achieve an optimal relation of the existing hardware with regard to contact rating, kind of contact and cycle number. Therefore, these parameters first assign the exits to the controller function.

H51: Mains frequency
This parameter is to select the mains frequency.

L0: Bus address
Adjust the ST Bus address.

H99: Password
This parameter is to adjust the password for the H—level.

d-level (defrosting functions)

This level contains the parameters for defrosting.

NOTE: Defrosting parameter only affects **control circuit 1**

Para-meter	Function	Adjustment range	Standard setting	Custom setting
d0	Defrosting interval TH1	1 ... 99h 0: no defrosting	0	
d2	Defrosting temperature TH1	-99.0 ... 999.0°C	10.0 °C	
d3	Defrosting time limit TH1	1 … 99 min. 0: no time limit	30 min.	
d9	Manual defrosting TH1	0...1	0	
d99	Password d-level	-99...999	89	

Parameter description d-level:

d0: Defrosting interval
The "defrosting interval" defines the time, after which a defrosting process is started. After each defrosting start, this time is reset and runs the next interval.

Manual defrosting:
Pressing the key **UP** for at least 3 sec. the defrosting interval is activated earlier. Alternatively, parameter **d9** can be applied for this function, too. The next automatic defrosting process takes place again after the time **d0**. (defrosting synchronisation)

d2: Defrosting temperature
This permits to terminate defrosting when the adjusted desired temperature value is reached. The defrosting time set with "**d3**" nevertheless runs at the same time, i.e. it functions as safety net to terminate the defrosting process in case the defrosting temperature is not reached.

d3: Defrosting time limit
After the here set time the defrosting process is terminated.

d9: Defrosting time limit
At change of 0 - > 1 the defrosting process is started and the defrosting interval is re-set. (defrosting synchronisation)

d99: Password
This parameter is to set the password for the d-level.

A-level (analogue values)

This level contains the parameters for analogue inputs and outputs.

Para-meter	Function	Adjustment range	Standard setting	Custom setting
A1	Indication of actual value analogue input	-		
A2	Actual value correction Thermo couple/ temperature sensor (not valid for voltage/current input)	-99.0...99.9 °K	0 °K	
A3	Weighing factor analogue input (without U, I-entrance)	0.50 ... 1.50	1.00	
A4	Sensor type	1: KTY81-121 two-wire 2: Pt100 two-wire 3: Pt100 three-wire 4: NTC (10k at 25°C) 5: Pt1000 two-wire 6: Pt1000 three-wire 7: Current input 0...20mA (drain) 8: Current input 4...20mA (drain) 9: Voltage input 0...10V 10: Voltage input 2...10V 11: Thermo element type J 12: Thermo element type K 13: Thermo element type S	11	
A5	reserved			
A6	reserved			
A7	reserved			
A8	reserved			
A9	reserved			
A40	Time constant of the software filter	0: not active, average value with 1: 2 measuring values (2*X s) 2: 4 measuring values (4*X s) 3: 8 measuring values (8*X s) 4: 16 measuring values (16*X s) 5: 32 measuring values (32*X s) 6: 64 measuring values (64*X s)	4	
A50	Indication of the PID variable	-		
A51	reserved			
A52	reserved			
A53	reserved			
A54	reserved			
A55	reserved			
A60	reserved			
A99	Password A-level	-99 ... 999	89	

Parameter description A-level:

A1: Indication of actual value analogue input
The here indicted temperature value is the sum of the actual measured value of sensor **F1** and the actual value correction according to parameter **A2**.

A2: Actual value correction analogue input
With this parameter it is possible to correct actual value deviations for example caused by sensor tolerances or extremely long sensor lines. The control measured value is increased or decreased by the here set value.

A3: Weighing factor analogue input (without U, I-entrance)
With this parameter the actual value can be submitted to weighing. The measured value is multiplied by it and both indicated in the display and applied for regulation.

A4: Analogue input type
This parameter permits selection of the sensor type, respectively the type of analogue input if the needed hardware prerequisites are available.

A40: Time constant of the software filter
With several measuring values, it is possible to obtain an average value. If a sensor with a very fast reaction to external influences is used, an average value ensures a calm signal process.

A50: Indication of the PID variable
Indication of the internally computed PID variable from -100%... 100%.

A99: Password
This parameter permits setting of the password for the A-level.

Status indications and error messages

Message	Cause	Error elimination
F 1_	Sensor error (H: open-circuit or L: short-circuit at sensor F1)	Check sensor
F 2_	Sensor error (H: open-circuit or L: short-circuit at 3-wire correction	Check sensor
F S_	Sensor error at setpoint sensor (H: open-circuit or L: short-circuit at sensor F1)	Check sensor
E P_	0: Error program memory 1: Error parameter memory **=> ALL EXITS WILL BE SWITCHED OFF**	Repair controller
---	Display overrun or key-lock	
Flashing display	Temperature alarm at too high or too low temperatur (if activated)	

If an error is recognised in the parameter memory (indication EP) and therefore the saved settings cannot to be used, relays are set out of power supply.

Independent of this, a sensor error (display **F1/2L** or **F1/2H**) is indicated by a flashing display and the buzzer. Switching off the buzzer with the **DOWN** key is possible at any time. The buzzer restarts after 10 minutes if the error is eliminated.

Technical data of ST46-31

Measuring input
F1: Thermo element type J/K
Measuring range: J: -99...700°C
K: -99...999°C
Measuring accuracy: 0.5% +/- 2K, without sensor

Outputs
K1: Relay, 5(1)A 250V, change-over contact

Display
One 3-digit LED-display, height 7mm, for temperature display, colour red
One LED, for status display of K1

Power supply
230V 50/60Hz, ca. 2VA
Power supply is galvanically separated from sensor by means of the transformer.

Connectors
Screw terminal, for cable up to 2.5mm^2

Ambient conditions:
Storage temperature: -20°C...+70°C
Operating temperature: 0...55°C
Relative humidity: max. 75%, without dew

Weight
ca. 250g, without sensor

Enclosure
Front IP50

Installation data
The unit is clip-on mounted on DIN-Rail 35 x 7.5 mm according to DIN EN 50022.
Housing size: L 95mm x W 53mm x H 59mm