ST710-PNUVM.32

PID controller

Order number 900216.005
Old Id.Nr.: 312488

Wiring diagram

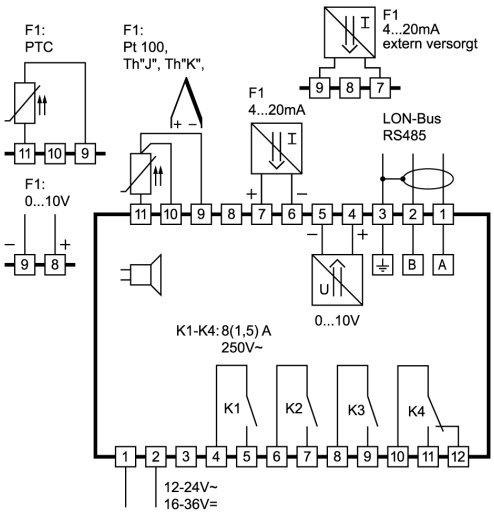

Product description

The PID controller with a 4-digit LED display, 5 keys and 4 relays is foreseen as universal controller. Beside resistance sensors and semiconductor thermo element the multi-sensor sensor entrance can equally process 0... 10V and/or 4...20mA. The cross-linking of the controller takes place via standard LON interface. The general functions which can be freely parametered open the way for a broad application area.

Range: dependent on the type of sensor
Front size: 84mm x 42mm
Panel cutout: 67,5mm x 31,5mm
Connector: plug and socket

ST 710 (715)... / ST71...

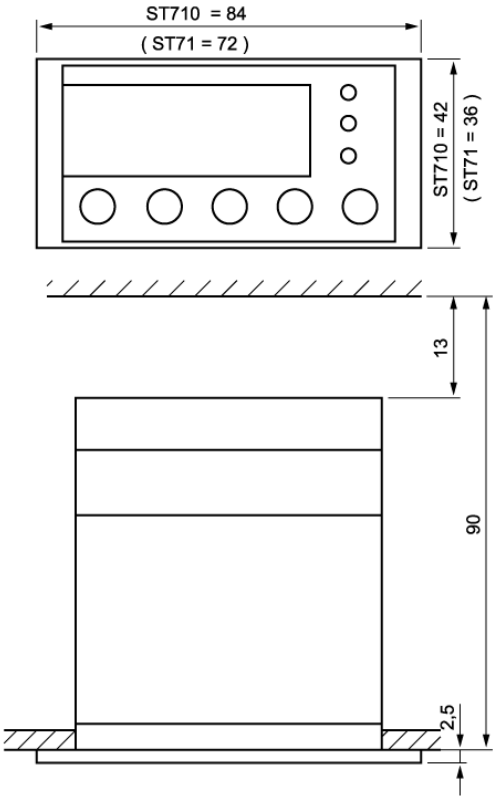

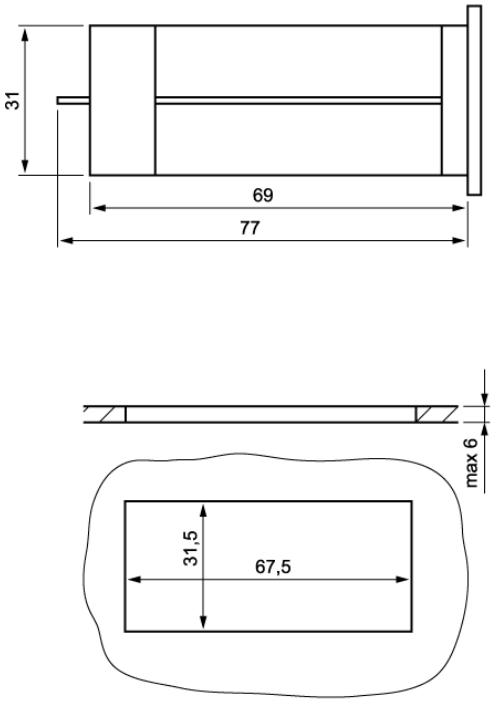

SOFTWARE .32

Adjustment options

Key 1: UP
Pressing this key you can increase the parameter or parameter value or scroll the parameter list.

Key 2: DOWN
Pressing this key you can decrease the parameter or parameter value or scroll the parameter list. At alarm the buzzer function can be switched off with this key.

Key 3:
Different functions can be assigned to this key by help of parameter b2 (i.e. start of auto-tuning). Pressing the key for at least 3 seconds will start the auto-tuning cycle or abort a previously started cycle.

Key 4: SET
While SET key is pressed, the setpoint is indicated.
In addition, the SET key is used for setting parameters

Key 5: Standby
Different functions can be assigned to this key by help of parameter b1.

First control level:

Parameter setting of the control setpoint
If none of the keys is pressed, the display indicates the actual value of the temperature. Pressing the SET key, the setpoint shows on the display.
If the setpoint is to be changed, the SET key is to be kept pressed while adjusting the setpoint with the keys UP and DOWN.
Please note that the setpoint can only be changed within the set setpoint limits.

The setpoint S1' (if available) can be adjusted in the same way. If setpoint S1' is activated it is indicated and relevant for the control in case of closed switching input.

Para-meter	Function description	Adjustment range	Standard setting	Custom setting
S1	Setpoint	P4...P5	0.0°C	
S1'	Setpoint at closed switching input E1	-99...+99.9 K if A33=2 P4...P5, if A33=1	0.0°C/K	

Second control level (P parameters):

Setting of control parameters
Simultaneously pressing the UP and DOWN key for at least 4 seconds opens a parameter list containing control parameters.
With the UP and DOWN keys the list can be scrolled in both directions.
Pressing the SET key will give you the value of the respective parameter. Pressing also the UP or DOWN key at the same time the value can be adjusted.
Return to the initial position takes place automatically, if no key is pressed for 60 seconds.

Para-meter	Function description	Adjustment range	Standard setting	Custom setting
P1	Setpoint 2 or DeltaW	P4...P5 -99.9...+99.9 K	0,0°C +10.0K	
P2	Hysteresis contact K1	0.1... 99.0 K	1.0 K	
P3	Hysteresis contact K2	0.1... 99.0 K	1.0 K	
P4	Control range limitation – minimum setpoint	-99°C...P5	0.0°C	
P5	Control range limitation – maximum setpoint	P4...999°C	200°C	
P6	Actual value correction	-20.0...+20.0 K	0.0 K	
P7	Proportional band	0.1 ... 99.9 K	15.0 K	
P8	Reset time Tn (I-factor)	0 ... 999 sec. (0 sec. = inactive)	500 sec.	
P9	Lead time Tv (D-factor)	0 ... 999 sec. (0 sec. = inactive)	50 sec.	
P10	Cycle time Tp	2 ... 65 sec.	8 sec.	
P11	Employment point of the ramp phase	P4…P5	-1.0 K or 0.0 °C	
P12	Ramp gradient	0.01 ... 99.9 K/min	10.0 K/min.	
P19	Key-lock	0: no key-lock 1: key-lock	0	
P30	Lower alarm value	-99 ... 999°C/K	-10°C	
P31	Upper alarm value	-99 ... 999°C/K	+10°C	
P32	Hysteresis alarm circuit	0.1... 99.9 K	1,0 K	
P40	Analogue output	0: control output PID 1: actual value	0	
P41	Indication value for 0V at analogue output	-99.9 ... 999.9°C	0.0 °C	
P42	Indication value for 10V at analogue output	-99.9 ... 999.9°C	100 °C	
P43	Indication value full heating performance (+100 %)	-10.0 ... 10.0 V	+10.0 V	
P44	Indication value "0" performance (0 %)	-10.0 ... 10.0 V	0.0 V	
P45	Indication value full cooling performance (-100 %)	-10.0 ... 10.0 V	- 10.0 V	

Parameter description:

P1: Setpoint / DeltaW for control circuit 2
Adjusting the setpoint of control circuit 2.
If A5=1, the setpoints for control circuit 1 and 2 are linked with one another via switching difference DeltaW, which can be adjusted with P1. (operation with DeltaW)
The following applies: setpoint thermostat 2 = setpoint control circuit 1 + delta W2.
This difference can take positive or negative values. Thus, a leading or following contact can be realised.

P2: Hysteresis contact K1
P3: Hysteresis contact K2
The hysteresis can be set symmetrically or one-sided at the setpoint (see A40, A41).
At one-sided setting, the hysteresis works downward with heating contact and upward with cooling contact. At symmetrical hysteresis, half of the hysteresis' value is effective below and half of the value above the switching point (see fig. 1 and 2).

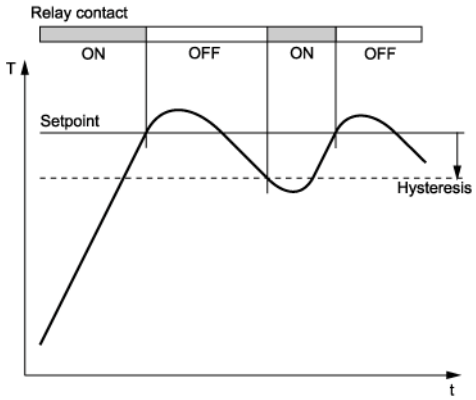

Fig. 1: Heating controller, one-sided hysteresis hysteresis

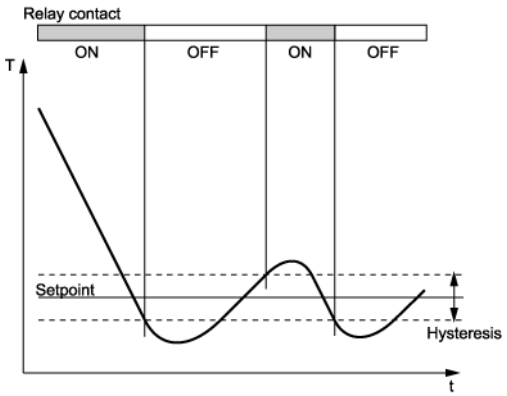

Fig. 2: Cooling controller, symmetrical

P4: Control range limitation – minimum setpoint
P5: Control range limitation – maximum setpoint
The adjustment range of the setpoint can be limited in both directions. This is to prevent the end user of a unit from setting inadmissible or dangerous setpoints.

P6: Actual value correction
This parameter allows the correction of actual value deviations caused for example by sensor tolerances or extremely long sensor lines. The regulation measure value is increased or decreased by the here adjusted value.

P7: Proportional band at PID regulation
The proportional part works in such a way that with approximation of the actual value to the setpoint the variable is reduced linearly from +-100% to 0%.

P8: Reset time Tn (Integral-portion)
The proportional controller as such has a remaining deviation of the actual value from the setpoint. The integral portion provides for a complete compensation of this offset
The reset time is a measure for the period of time needed to adjust a remaining temperature deviation of the size of the proportional range.
If a small reset time is set, a fast post-adjustment will take place. At a too small reset time, however, the system may tend to vibrate

P9: Lead time Tv (Differential-portion)
The differential portion dampens temperature changes. If a long lead time Tv is set, damping is strong. At too long lead time, however, the system may tend to vibrate. At setting 0 the values are ineffective. It is therefore possible to realise a pure PI or PD regulation.

P10: Cycle time Tp
The cycle time is the time, in which the control output runs through one switching period, i.e. once switched out and once switched on. The smaller the cycle time, the faster the regulation. By consequence, however, there is also an increased switching frequency of the exit, which can lead to rapid wear of relay contacts. For very fast control ways with the respective high switching frequency a voltage output is therefore of advantage.

P11: Employment point of the ramp phase
Before reaching the point of ramp employment the controller works at full heating/cooling power. After reaching the point of ramp employment regulation to reach the setpoint is effected by help of a ramp profile. The ramp is ascending at heating function with employment points below the setpoint. At cooling function it is falling with employment points above the setpoint.
After the setpoint is reached, the ramp function becomes inactive, unless the temperature exceeds the point of ramp employment again in either direction, due to external influences. Changes of ramp parameters are not considered once the ramp has started, but become effective only thereafter. In the case of activated ramp function, there are two employment points for the ramp possible (see parameter A6):

Fig. 3: relative values

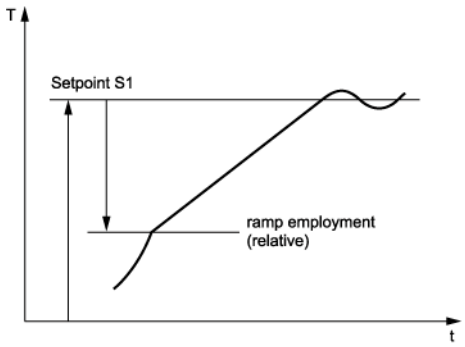

The main setpoint S1 and the point of ramp employment are linked as difference with one another. This difference can take positive or negative values, i.e. starting point for the ramp can be above the setpoint at cooling function or below the setpoint at heating function, and automatically runs along with adjustments of the desired value.

Fig. 4: absolute values

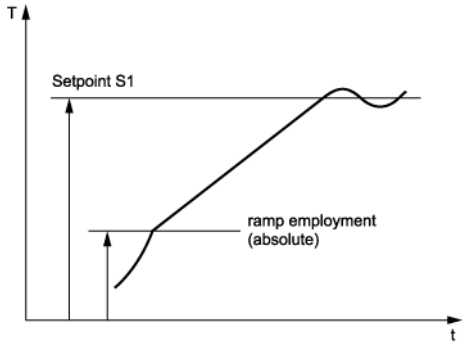

Main setpoint S1 and ramp employment point are independent from each other.

P12: Ramp gradient
The ramp gradient sets the degree applied to change the (internal) setpoint in a ramp phase.

P19: Key-lock
The key-lock allows blocking of the control keys. In locked condition parameter adjustments with keys is not possible. At the attempt to adjust the parameters despite key-lock the message "===" appears in the display.

P30: Lower alarm value
P31: Upper alarm value
The exit alarm is a boundary alarm or a range alarm with one-sided or symmetrical hysteresis (see parameter P32 and A42). Both at the boundary alarm and the range alarm, limit values can be relative, i.e. going along with the setpoint, or absolute, i.e. independent of the setpoint. The operation mode is set with parameter A30. If, in case of boundary alarm and only one switching point is required the not used second switching point should be adjusted to a value above or below the operating range of the controller.

Boundary alarm function (see fig. 5):
The alarm contact is closed if the process temperature is above the upper or below the lower boundary value.

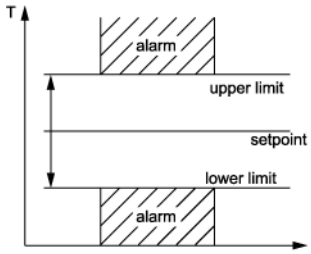

Fig. 5: Boundary alarm, rel. boundaries

Range alarm function (see fig. 6):
Opposite switching behaviour to the boundary value alarm. The alarm contact is closed if the actual value remains between the boundary values.

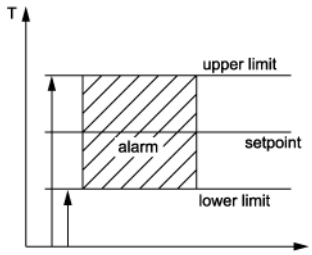

Fig 6: Range alarm, abs. boundaries

P32: Hysteresis alarm circuit
Hysteresis is set one-sided or symmetrical at the adjusted limit value. It becomes effective depending on alarm definition.

P40: Analogue output
This is to define whether the analogue output carries the control output of the PID regulation or the actual value. In case of control output display, the sign can change, depending on whether heating or cooling is required. The actual values, however, are always indicated with positive sign.

P41: Indication value for 0V at analogue output
P42: Indication value for 10V at analogue output
Indication of the actual value (see P40) is subject to the following range adjustment:
If the indication value reaches the value set in P41, voltage is 0 V.
If the indication value reaches the value set in P42, voltage is 10 V.

P43: Indication value full heating performance (100%)
P44: Indication value "0" performance
P45: Indication value full cooling performance (-100,0%)
Indication of the PID control output (see P40) is subject to the following range adjustment:
If heating is to be performed with 100 % heating performance, voltage is as set in P43.
If neither heating nor cooling is required, voltage is as set in P44.
If cooling is to be performed with 100% cooling performance, voltage is as set in P45.

Third control level, (A parameters):

Setting of control parameters
Access to the third control level is granted when selecting the last P-parameter on the second control level. Continue to press the UP key for approximately 10 seconds until “PA” appears. Continue to press the UP key and additionally press the DOWN key for about 4 seconds and the first A-parameter of the third control level is indicated.
With the keys UP and DOWN you can scroll the list in both directions. Pressing the SET key will give you the value of the respective parameter. By pressing the UP or DOWN key at the same time the value can be adjusted.
Return to the initial position takes place automatically, if no key is pressed for 60 seconds, or by simultaneously pressing the UP and DOWN key for approx. 4 seconds.

Para-meter	Function description	Adjustment range	Standard setting	Custom setting
A1	Switch mode contact K1	0: heating contact 1: cooling contact	0	
A2	Switch mode contact K2	0: heating contact 1: cooling contact	1	
A3	Function of contact K1 at sensor error	0: relay off 1: relay on	0	
A4	Function of contact K2 at sensor error	0: relay off 1: relay on	0	
A5	Selection setpoint 2 or DeltaW	0: operation with setpoint 2 1: operation with DeltaW	1	
A6	Control characteristics contact K1	0: thermostatic 1: PID 2: thermostatic with relative ramp 3: thermostatic with absolute ramp 4: relative ramp (PID) 5: absolute ramp (PID)	1	
A7	Control characteristics contact K2	0: thermostatic 1: PID	0	
A8	Display mode	0: with decimals 1: integrals	0	
A9	Weighing factor	ineffective	-	
A10	Indication value for lower value linear analogue input	-99 ... 999°C	0°C	
A11	Indication value for upper value linear analogue input	-99 ... 999°C	100°C	
A19	Parameter lock	0: no lock 1: A-parameter locked 2: A- and P-parameter locked	0	
A30	Function alarm exit	0: Boundary alarm, relative 1: Boundary alarm, absolute 2: Range alarm, relative 3: Range alarm, absolute	0	

Para-meter	Function description	Adjustment range	Standard setting	Custom setting
A31	Special function at boundary or range alarm	0: no special function 1: flashing display 2: buzzer 3: flashing display and buzzer 4: like 3, buzzer can be cancelled 5: like 4, cancelled buzzer restarts after 10 min. 6: like 4, cancelled buzzer restarts after 30 min	0	
A32	Setpoint display	0: display shows actual value 1: display shows setpoint S1 (S1‘)	0	
A33	Type of setpoint S1‘	0: not active 1: absolute (freely adjustable) 2: relative to setpoint S1	0	
A40	Hysteresis mode contact K1	0: symmetrically 1: one-sided	0	
A41	Hysteresis mode contact K2	0: symmetrically 1: one-sided	0	
A42	Hysteresis mode alarm contact	0: symmetrically 1: one-sided	0	
A60	Sensor type	0: Thermocouple type J 1: Thermocouple type K 2: Pt100 2-wire 3: Pt100 3-wire 4: PTC (KTY81-110) 5: 2...10V 6: 0...10V 6: 4...20mA 7: 0...20mA	3	
A70	Software filter	0…10: 0=inactive	1	
A80	Temperature scale	0: Fahrenheit (50 Hz) 1: Celsius (50 Hz) 2: Fahrenheit (60 Hz) 3: Celsius (60 Hz)	1	
U1	Output connection relay K1	0: no connection 1: connection to contact K1 2: connection to contact K2 3: connection to alarm contact 4: connection to key 3 (if set with b2) 5: on with key 5	1	
U2	Output connection relay K2	0…5 (see U1)	2	
U3	Output connection relay K3	0…5 (see U1)	3	
U4	Output connection relay K4	0…5 (see U1)	4	
b1	Function key 5	0: inactive (unit always on) 1: standby function (“OFF”) 2: standby function (“AUS”) 3: standby function (“OFF”) condition saved 4: standby function (“AUS”) condition saved	1	

Para-meter	Function description	Adjustment range	Standard setting	Custom setting
b2	Function key 3	0: no function 1: start auto-tuning 2: switching relay (acc. Ux) 3: switching relay (relay off in standby mode)	3	
b3	Function input E1	0: inactive 1: setpoint S1‘ activated (see A33) 2: switch display “EIN”/”Standby”	1	
S/A	Start auto-tuning	0: 1: start auto-tuning	0	
L0	Individual address (Node)	0...126	1	
L1	Individual address (Subnet)	1...255	1	
Lr	Reset parameters	0: no reset 1: reset parameters, including Lr	0	

Parameter description:

The following values can change the equipment characteristics and are therefore to be set with utmost care.

A1: Switch mode contact K1
A2: Switch mode contact K2
The switch mode for the relays, i.e. cooling or heating function, can be programmed independently at works. Heating function means that the contact opens as soon as the setpoint is reached, thus power interruption. At cooling function the contact closes, if the actual value is above the required setpoint. (see fig. 1 + 2)

A3: Function of contact K1 at sensor error
A4: Function of contact K2 at sensor error
At sensor error the selected relay falls back into the condition pre-set here. If there is a data-loss in parameter memory (display indicates “EP”) both contacts K1 and K2 are switched off.

A5: Selection setpoint 2 or DeltaW
This parameter determines whether the setpoints for thermostat 1 and 2 independently adjustable (A5=0) or whether they are tied with one another via a switching offset DeltaW (A5=1). This parameter applies only to contact K2 (see parameter P1).

A6: Control characteristics contact K1
A7: Control characteristics contact K2
Independent choice of either PID or thermostatic characteristics for each contact.
A ramp profile can be additionally applied to control circuit 1.
If both A6 and A7 are set to “1” both outputs have the same setpoint. This setting is used i.e. to control a motor valve.

A8: Display mode
The value can be indicated in integrals or with decimals. In general, all parameter indications are presented with decimals.

A10: Indication value for lower value linear analogue input
A11: Indication value for upper value linear analogue input
Only relevant, if the controller is programmed for a voltage input (0…10V linear) or a current input (4…20mA linear). These parameters allow scaling of the linear analogue input. The value to be indicated for the lower and upper entrance value then defines the range the controller will indicate. For input range 4…20mA the display will show sensor error if the input signal drops below 4mA.

A19: Parameter lock
This parameter enables locking of each parameter level. If third level is locked, only parameter A19 may be changed.

A30: Function alarm exit
The alarm exit evaluates an upper and a lower limit value (see parameters P30 and P31), whereas a selection is possible as to whether the alarm is active if the temperature lies within these two limits, or whether the alarm is released if the temperature lies beyond them. In the case of sensor error, the alarm is activated independently of this adjustment.

A31: Special function at boundary or range alarm
Here can be selected whether, in the case of an alarm, the indication to flash and/or the buzzer is to start. Sensor alarm (display F1L or F1H) is indicated independently thereof by flashing display and the buzzer.

A32: Setpoint display
A32=0 indicates the actual value, A32=1 statically indicates the setpoint S1 or S1' in the display. Therefore, the current actual value can only be indicated with parameter P0.

A33: Adjustment of setpoint S1' (not available on all types of controllers)
By closing switching input E1, setpoint S1 can be switched to a setpoint S1'. Setpoint S1' can be either relative to setpoint S1 or an independent, freely adjustable, control setting.
The setpoint S1' can only be accessed if input E1 is closed. The setpoint S1' can only be activated, if the external input is configured for setpoint change-over (parameter A81=2 or 3).

A40: Hysteresis mode contact K1
A41: Hysteresis mode contact K2
These parameters allow selection as to whether the hysteresis values which are adjustable with P2, P3 are set symmetrically or one-sided at the respective switching point. At symmetrical hysteresis, half of the hysteresis' value is effective below and half of the value above the switching point. The one-sided hysteresis works downward with heating contact and upward with cooling contact (see fig. 1 + 2).

A60: Sensor type
These parameter permits selection of the sensor type, if the needed hardware prerequisites are available.

A70: Software filter
With several measuring values, it is possible to obtain an average value. This parameter can determine by how many measured values an average value is to be formed. If a sensor with a very fast reaction to external influences is used, an average value ensures a calm signal process.

A80: Temperature scale
Indication can be switched between Fahrenheit and Celsius. At conversion, the parameters and setpoints maintain their numerical value and adjustment range. (Example: A controller with the desired value of 0°C is switched to Fahrenheit. The new desired value is then interpreted as 0°F, which corresponds to a temperature of -18°C).
NOTE: Indication limits with °F can be smaller than the actual measuring range!

U1: Output connection relay K1
U2: Output connection relay K2
U3: Output connection relay K3
U4: Output connection relay K4
Generally, the outputs are exchangeable with parameter adjustments, in order to achieve an optimal relation of the existing hardware with regard to contact rating, kind of contact and cycle number. Therefore, these parameters first assign the outputs to the controller function.

b1: Function key 5
If the key is used the controller can be set to standby mode manually by pressing this key (display indicates "OFF" or "AUS"). In standby mode no control takes place and the parameters can not be changed. If b1=3 or b1=4 the condition prior to switching mains off will be saved.

b2: Function key 3
With b2=1 the auto-tuning cycle will be started by pressing this key (even in standby mode). The key has to be pressed for at least 3 seconds.
With b2=2 a relay (indicated with parameter U1-4) can be switched on or off directly with the key. (even in standby mode)
With b2=3 a relay (indicated with parameter U1-4) can be switched on or off directly with the key. In standby mode the key is locked and the corresponding relay switched off. After restarting the corresponding relay returns its previous condition.

b3: Function E1
With this parameter function of the switching input E1 can be set. With b3=0 the input E1 is not evaluated. With b3=1 setpoint S1 is switched to setpoint S1' when input E1 is closed. With b3=2 each change of the condition of E1 switches the controller on/off.

S/A: Start auto-tuning
By setting this parameter to "1" the auto-tuning cycle can be started (as an alternative to start it with key 2).

Parameter for serial interface
L0: Individual address (Node)
L1: Individual address (Subnet)
STOERK TRONIC devices can be hooked with "self installation". In this case, however, each participant has to be assigned a clear address. This address corresponds to the knot address and subnet address with Domain=0.
The address of the knot can only be changed, if the knot was not tied externally (SNVT "nciNetConfig" = CFG_LOCAL), otherwise the changed value is not saved (after releasing the set key the old value is reset).

Lr: Reset parameters
This parameter is special as it can reset all parameters to the condition ex works. At setting Lr = 1 reset takes place, and Lr itself is reset to zero again. Note that customised values will become effective if these were adjusted prior to delivery.

Auto-tuning

The auto-tuning mode serves to automate the time-consuming procedure of adjusting PID parameters. The automatic tuning cycle drives a measuring curve, which provides the controller with a model conception of the control system. Based on this data it calculates the requested PID parameters (see fig. 9).

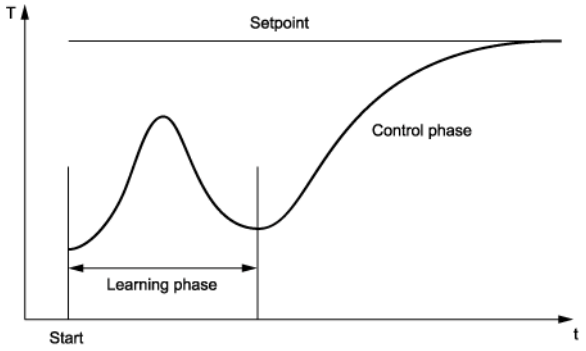

Fig. 9: Auto-tuning cycle

For optimal results the starting temperature should have the highest possible difference to the setpoint (a stationary condition of the controlled system prior to start is favourable, but not absolutely necessary).
There may be an occasional excess of the setpoint during the learning phase.

During the automatic tuning cycle the following messages successively appear in the display:
Au0 phase 1 of the measuring curve
Au1 phase 2 of the measuring curve
Au2 phase 3 of the measuring curve

Upon successful termination of the automatic tuning, control automatically continues with the new PID parameters. Parameters P7, P8, P9 and P10 are replaced by the new values.

Status messages following the automatic tuning cycle:
E-0 Error-free termination of automatic tuning. New PID values saved.
E-4 Actual value and setpoint too close together when starting the cycle. Setpoint exceeded at measurement. For safety reasons switched to thermostat control. No new PID parameters defined. Select appropriate setpoint or lower start temperature and repeat procedure.
E-5: Error setpoint for this procedure.
Example: Heating controller with a setpoint below the actual value. Controller switches to PID mode with former parameters.

All messages can be acknowledged with the SET key.

The values determined in the automatic tuning mode are saved on the captive memory and are valid also after interruption by voltage failure. The measuring procedure can be repeated as many times as desired.
In case of interruption of the automatic tuning cycle due to voltage failure, the controller takes up operation with the settings valid before restart.

LON-bus and serial communication

General note
The control program has some standardized variables of type “SNVT” which permit the communication with external units via LON-bus. There are input and output values. The input values permit settings for the controller, which are directly available for the control process. The output values indicate measuring values and status information of the unit.

Automatic update of variables
At each adjustment of the values in the controller the corresponding output variables are updated. If there are no condition changes the values will be updated every “nciMaxSendTime” seconds. If “nciMaxSendTime” is less than 1.0 sec. the values are no more updated in intervals but only if there is any change.
(Therefore the following can occur: a master controller determines the setpoint of a slave controller. The setpoint of the slave controller will be updated immediately if there is a change at the master controller. If the setpoint is changed at the slave controller the “correct” value will be send to the slave after “nciMaxSendTime” seconds.)

Adjustments of the input variables will be applied to the controller immediately and cause an EEProm write access. Keep in mind the limited amount of save cycles.

Definition of the standard network variables
The standard network variables correspond the type „Refrigerated Display Case Controller“ (with extras) and the control object „0“ (minimal requirements with extras).

Thermostat object (Refrigerated Display Case Controller)

Name of variable	Type	Input/Output	Values	Description
nvoTemp	SNVT_temp	Output	(see according sensor) 0x7fff: sensor error	Temperature
nvoCutoutTemp	SNVT_temp	Output	see P4, P5	Setpoint indication
nvoPulswidth	SNVT_lev_percent	Output	-100..100%	Indication of the PID pulse width in percent.
nvoActState*	SNVT_state	Output	Bit 0: K1 Bit 1: K2 Bit 2: K3 Bit 3: K4	Switch conditions
nviCutoutTemp*	SNVT_temp_p	Input	see P4, P5	Setpoint
nciMaxSendTime	SNVT_time_sec	Input	0...32000s	max. time to update variables

„Object 0“

Name of variable	Type	Input/Output	Values	Description
nvoStatus	SNVT_obj_status	Output	-> SNVT list invalid_id invalid_request	Object status (min. requirements)
nciNetConfig	SNVT_config_src	Input	CFG_EXTERNAL CFG_LOCAL	Node configured extern or intern
nviRequest	SNVT_obj_request	Input	-> SNVT list	Object Request

* SNVTs, which are added to the corresponding standard object.

Connection information

Simultaneously pressing all keys sends a „Service-Pin“ message (the program version of the software is indicated in the display.

The controller responds to a “wave” command with a display flashing 3 times.

Note that if a data logger is used the node number will change at connection (the domain must remain “0”. After a controller reset the new address can be queried with parameter “L0” and “L1”. These parameters may not be changed after connection (ensured by “nciNetConfig“).

Connection to data logger

General note
The following listed measuring values as well as the inputs and outputs are available for the data logger TRL1 via LON interface. In general the setpoints and parameters all are accessible.

Data logger protocol

Parameter values (read/write)		
Adjustable parameters:	P1,P2,P3,P4,P5,P6,P7,P8,P9,P10,P11,P12,P19,P30,P31,P32,P40, P41,P42,P43,P44,P45,A1,A2,A3,A4,A5,A6,A7,A8,A9,A10,A11,A19, A30,A31,A32,A33,A40,A41,A42,A60,A70,A80,U0,U1,U2,U3,b1,b2, b3,S/A,L0,L1,Lr,S1,SAA*,SAR**	
Adjustable setpoints	S1,Y1	
Actual values (only read)		
Actual value temperature	A1	0
PID control value	A2: -100...100%	1
Controller status (only read)	D1: Bit 0: “controller on” Bit 1: Output K1 Bit 2: Output K2 Bit 3: Output K3 Bit 4: Output K4 Bit 5: Bit 6: Auto-tuning started Bit 7: Auto-tuning terminated Bit 8: Auto-tuning error (only together with bit 7) Bit 9: Bit 10: K1 (Relay status) Bit 11: K2 (-"-) Bit 12: K3 (-"-) Bit 13: K4 (-"-) Bit 14: Digital input 1 Bit 15: Alarm	3
Status (adjustable)		
Controller status	D1 Bit 0: „Controller On" Bit 1...15:	0

*SAA: Absolute second setpoint at setpoint switch-over via switching input
**SAR: Relative second setpoint at setpoint switch-over via switching input

Status messages

Message	Cause	Error elimination
F 0, display flashes	Sensor error	The buzzer can be switched off with the DOWN key Check sensor, check parameter A60
F 1, display flashes	Sensor error	The buzzer can be switched off with the DOWN key Check sensor, check parameter A60
_ _ _	Key-lock active	Change parameter P19 or A19
display flashes	Temperature alarm at too high or too low temperature (if activated) see A31	
Buzzer	Temperature alarm at too high or too low temperature (if activated) see A31	The buzzer can be switched off with the DOWN key.
Au0	Auto-tuning in progress	Wait
Au1	Auto-tuning in progress	Wait
Au2	Auto-tuning in progress	Wait
E-0	Auto-tuning terminated without errors New PID values are saved	Confirm with SET key
E-4	Auto-tuning cancelled, no new PID values calculated. Actual value and setpoint to close at start of the auto-tuning cycle. Setpoint was exceeded. The controller switches to thermostatic mode.	Confirm with SET key Choose a more suitable setpoint for the auto-tuning process or start with a lower actual temperature.
E-5	Auto-tuning cancelled, no new PID values calculated. The setpoint was useless for the auto-tuning cycle (i.e. setpoint below actual value in case of heating controller). The controller switches to PID mode with previous control parameters.	Confirm with SET key
F90	Network error, serial interface	The buzzer can be switched off with the DOWN key. Check connection wires. Check address L0.
EP	Data loss at parameter memory	If error can not be eliminated by resetting the unit to conditions ex works (set parameter Lr to “1”) the controller must be repaired. **Attention:** While doing so all parameters will be set to standard settings!

Error messages are saved and indicated even if the cause is eliminated. Pressing the DOWN key deletes the error message.

Technical data of ST710-PNUVL.32

Measuring input

F1: Temperature sensor:
Pt100, 2wire or 3-wire
Thermo element, type J or type K
Linear input 0-10V or 0-20mA
PTC

Measuring ranges:	Pt100	-200°C...+840°C
	PTC	-50...145°C
	type J	-200...1200°C
	type K	-200...1200°C

Measuring accuracy of the controller: +/-0.5% of measuring range, max. +/-1K

Outputs

K1: Relay 8(1.5)A 250V, normally-open contact
K2: Relay 8(1.5)A 250V, normally-open contact
K3: Relay 8(1.5)A 250V, normally-open contact
K4: Relay 8(1.5)A 250V, change-over contact
Linear analogue exit with 0-10V output range, which can be limited by parameters

Installed buzzer, ca. 85dB

Display

One 4-digit LED-Display, height 13mm, for temperature display, colour red
Three LEDs, for status display of the outputs K1, K2 und K3.

Power supply

16-36V DC or 12-24V AC +/-10%, (50/60Hz)
power consumption max. 3VA

LON communication interface

shielded 2-wire line, Twisted Pair, 78kBaud, not polar, maximum cable length 100m
Interface driver: RS485, galvanically not separated.
The network has to be installed in lines topology and terminated with a 120 Ohm resistance on both sides.

Connectors

plug and socket
Clamp A: 12-pole, spacing 5.0 mm, for cable up to 2.5 mm²
Clamp B: 11-pole, spacing 3.5 mm, for cable up to 1.5 mm²

Ambient conditions:

Storage temperature	-20°C...+70°C
Operating temperature	0...55°C
Relative humidity	max. 75%, without dew

Weight

ca. 150g

Enclosure

Front IP65, IP00 from back

Installation data

Unit is to be installed in an instrument panel.

Front size	84 x 42 mm
Panel cut-out	67.5 x 31.5 mm
Installation depth	ca. 90 mm

Mounting by fixing strap.