ST710-JG1JA.10

Temperature controller

Order number 900212.030
Old Id.Nr.: 308320

Wiring diagram

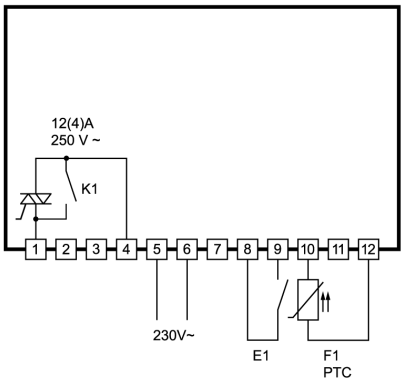

Product description

The controller ST710-JG1JA.10 was developed for simple thermostatic applications. Due to its complete equipment it can operate without any further components in many cases, e.g. cut-out relay or main switch.
The controller is supplied with 230V AC and has a hybrid switch which guarantees maximum switching frequency even at high stress. The controller has 4 keys. Three of them are there to controller adjustments. The fourth key activates stand-by function.

Sensor: PTC
Range: -50...130°C
Front size: 84mm x 42mm
Panel cut-out: 67,5mm x 31,5mm
Tightness: front IP65
Connector: screw terminal

ST 710 (715)... / ST71...

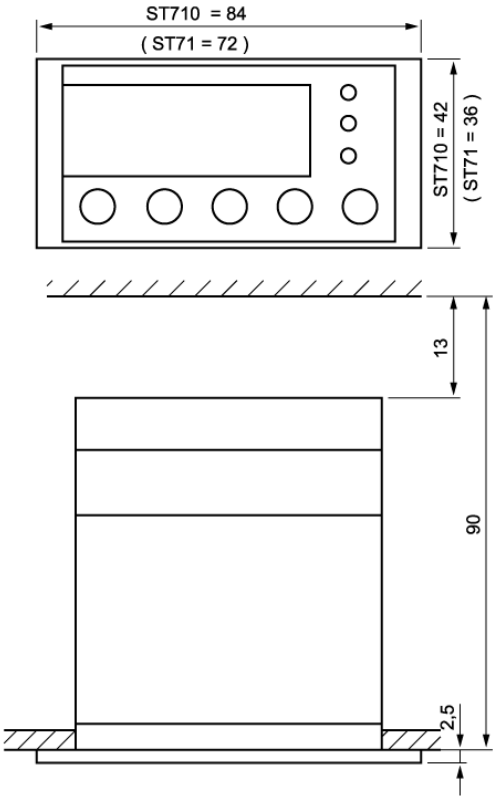

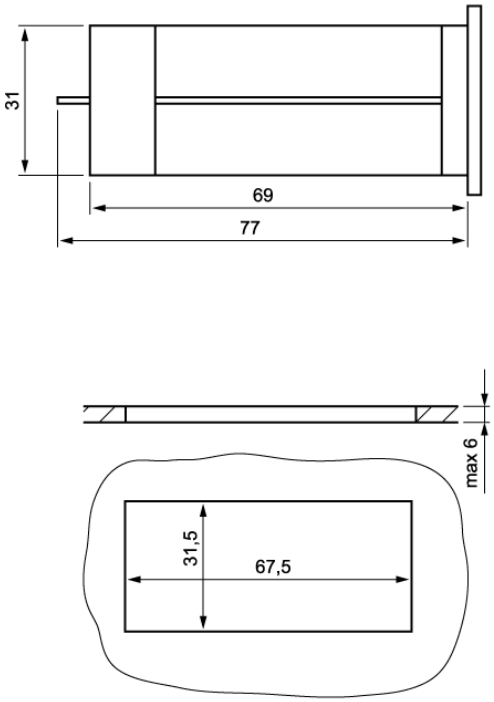

SOFTWARE .10

Adjustment options

Key 1: UP
Pressing this key you can increase the parameter or parameter value or scroll the parameter list.

Key 2: DOWN
Pressing this key you can decrease the parameter or parameter value or scroll the parameter list. At alarm the buzzer function can be switched off with this key.

Key 4: SET
While SET key is pressed, the setpoint is indicated.
In addition, the SET key is used for setting parameters

Key 5: Standby
Switching the controller on or off. After power interruption the functions of the controller return in their previous condition, except if switching input E1 is parametered for standby function too.

First control level:

Parameter setting of the control setpoint
If none of the keys is pressed, the display indicates the actual value of the temperature. Pressing the SET key, the setpoint shows on the display.
If the setpoint is to be changed, the SET key is to be kept pressed while adjusting the setpoint with the keys UP and DOWN.
Please note that the setpoint can only be changed within the set setpoint limits.

The setpoint S1' (if available and activated with parameter A81) can be adjusted in the same way. If setpoint S1' is activated it is indicated and relevant for the control in case of closed switching input.

Para-meter	Function description	Adjustment range	Standard setting	Custom setting
S1	Setpoint	P4...P5	0.0°C	
S1'	If A33≠0 and A81=2 or 3: setpoint at closed switching input E1	-99...+99.9 K if A33=1 P4...P5, if A33=2	0.0°C/K	

Second control level (P parameters):

Setting of control parameters
Simultaneously pressing the UP and DOWN key for at least 4 seconds opens a parameter list containing control parameters.
With the UP and DOWN keys the list can be scrolled in both directions.
Pressing the SET key will give you the value of the respective parameter. Pressing also the UP or DOWN key at the same time the value can be adjusted.
Return to the initial position takes place automatically, if no key is pressed for 60 seconds.

Para-meter	Function description	Adjustment range	Standard setting	Custom setting
P2	Hysteresis contact K1	0.1... 99.0 K	1.0 K	
P4	Control range limitation – minimum setpoint	-99°C...P5	-99°C	
P5	Control range limitation – maximum setpoint	P4...999°C	999°C	
P6	Actual value correction	-20,0...+20,0 K	0,0 K	
P19	Key-lock	0: no key-lock 1: key-lock	0	
P30	Lower alarm value	-99 ... 999°C/K	-99°C	
P31	Upper alarm value	-99 ... 999°C/K	100°C	
P32	Hysteresis alarm circuit	0.1... 99.9 K	1,0 K	
d0	Defrosting interval	1...99 hours 0: no defrosting	0	
d2	Defrosting temperature	-99.0 …999.0 °C	10.0 °C	
d3	Defrosting time limit	1…99 min 0: without time limit	30 min	

Parameter description:

P2: Hysteresis contact K1
The hysteresis can be set symmetrically or one-sided at the setpoint (see A40, A41).
At one-sided setting, the hysteresis works downward with heating contact and upward with cooling contact. At symmetrical hysteresis, half of the hysteresis' value is effective below and half of the value above the switching point (see fig. 1 and 2).

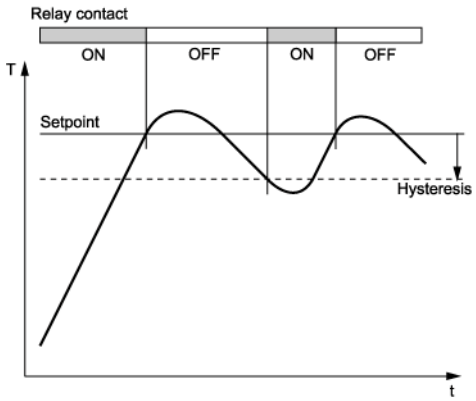

Fig. 1: Heating controller, one-sided hysteresis

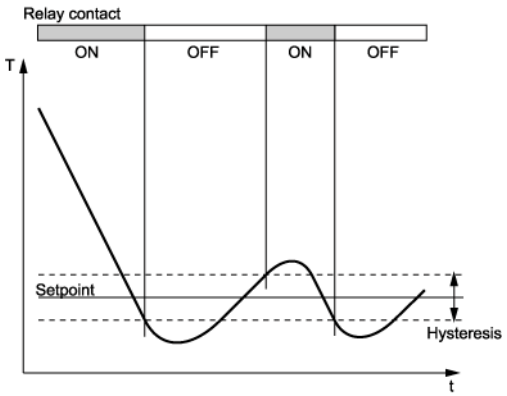

Fig. 2: Cooling controller, symmetrical hysteresis

P4: Control range limitation – minimum setpoint
P5: Control range limitation – maximum setpoint
The adjustment range of the setpoint can be limited in both directions. This is to prevent the end user of a unit from setting inadmissible or dangerous setpoints.

P6: Actual value correction
This parameter allows the correction of actual value deviations caused for example by sensor tolerances or extremely long sensor lines. The regulation measure value is increased or decreased by the here adjusted value.

P19: Key-lock
The key-lock allows blocking of the control keys. In locked condition parameter adjustments with keys is not possible. At the attempt to adjust the parameters despite key-lock the message "===" appears in the display.

P30: Lower alarm value
P31: Upper alarm value
The exit alarm is a boundary alarm or a range alarm with symmetrical hysteresis (see parameter P32). Both at the boundary alarm and the range alarm, limit values can be relative, i.e. going along with the setpoint, or absolute, i.e. independent of the setpoint (see fig. 3 and 4 next page). At boundary alarm the hysteresis works one-sided inwardly, and at range alarm outwardly.

Boundary alarm function (see fig. 3):
The alarm contact is closed if the process temperature is above the upper or below the lower boundary value.

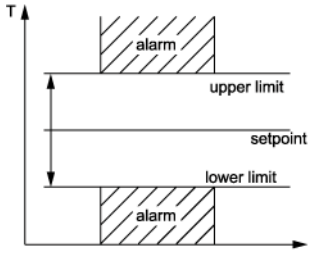

Fig. 3: Boundary alarm, rel. boundaries

Range alarm function (see fig. 4):
Opposite switching behaviour to the boundary value alarm. The alarm contact is closed if the actual value remains between the boundary values.

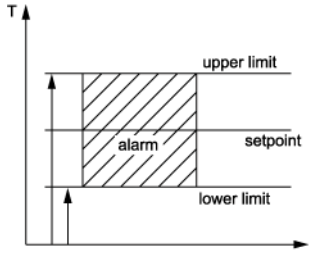

Fig. 4: Range alarm, abs. boundaries

P32: Hysteresis alarm circuit
Hysteresis is set one-sided at the adjusted limit value. It becomes effective depending on alarm definition.

d0: Defrosting interval
The "defrosting interval" defines the time, after which a defrosting process is started. After each defrosting start, this time is reset and runs the next interval.

d2: Defrosting temperature limit
This permits to terminate defrosting when the adjusted desired temperature value is reached. The defrosting time set with "d3" nevertheless runs at the same time, i.e. it functions as safety net to terminate the defrosting process in case the defrosting temperature is not reached.

d3: Defrosting time limit
After the here set time the defrosting process is terminated.

Third control level, (A parameters):

Setting of control parameters
Access to the third control level is granted when selecting the last P-parameter on the second control level. Continue to press the UP key for approximately 10 seconds until “PA” appears. Continue to press the UP key and additionally press the DOWN key for about 4 seconds and the first A-parameter of the third control level is indicated.
With the keys UP and DOWN you can scroll the list in both directions. Pressing the SET key will give you the value of the respective parameter. By pressing the UP or DOWN key at the same time the value can be adjusted.
Return to the initial position takes place automatically, if no key is pressed for 60 seconds, or by simultaneously pressing the UP and DOWN key for approx. 4 seconds.

Para-meter	Function description	Adjustment range	Standard setting	Custom setting
A1	Switch mode contact K1	0: heating contact 1: cooling contact 2: function alarm K1 3: function alarm K1 inverted	0	
A3	Function of contact K1 at sensor error	0: relay off 1: relay on	0	
A8	Display mode (all parameter indications are presented in 0,1°K)	0: integrals 1: decimals in 0.5°C 2: decimals in 0.1°C	1	
A10	Indication value for lower value linear analogue input	-99 ... 999°C	0°C	
A11	Indication value for upper value linear analogue input	-99 ... 999°C	100°C	
A19	Parameter lock	0: no lock 1: A-parameter locked 2: A- and P-parameter locked	0	
A30	Function alarm exit	0: Boundary alarm, relative 1: Boundary alarm, absolute 2: Range alarm, relative 3: Range alarm, absolute	0	
A31	Special function at boundary or range alarm	0: no special function 1: flashing display 2: buzzer 3: flashing display and buzzer	0	
A32	Setpoint display	0: display shows actual value 1: display shows setpoint S1 (S1‘)	0	
A33	Type of setpoint S1‘	0: not activated 1: relative to setpoint S1 2: absolute (freely adjustable)	1	
A40	Hysteresis mode contact K1	0: symmetrically 1: one-sided	1	
A50	Minimum action time contact K1 ”On”	0…400 sec.	0 sec.	
A51	Minimum action time contact K1 ”Off”	0…400 sec.	0 sec.	
A54	Delay after “Power-on”	0…400 sec.	0 sec.	
A56	Alarm suppression after "Power-On"	0…240 min.	0 min.	

Para-meter	Function description	Adjustment range	Standard setting	Custom setting
A60	Sensor type	21: PTC 22: PT1000 two-wire 23: PT1000 three-wire 24: NTC	21	
A70	Software filter	1: inactive **average value with:** 2: 2 measuring values (ca. 0.6s) 4: 4 measuring values (ca. 1.2s) 8: 8 measuring values (ca. 2.4s) 16: 16 measuring values (ca. 4.8s) 32: 32 measuring values (ca. 9.6s) 64: 64 measuring values (ca. 19.2s) 128: 128 measuring values (ca. 38.4s)	8	
A80	Temperature scale and display when in Standby-Mode	0: Fahrenheit (“AUS”) 1: Celsius (“AUS”) 2: Fahrenheit (“OFF”) 3: Celsius (“OFF”)	1	
A81	Function input E1	0: no function 1: controller On/Off (Standby) 2: setpoint S1‘ activated	0	
A82	Function standby key	0: no function 1: controller On/Off (Standby)	depends on available standby key	
Pro	Program version	-	-	

Parameter description:

The following values can change the equipment characteristics and are therefore to be set with utmost care.

A1: Switch mode contact K1
The switch mode for the relay, i.e. cooling or heating function, can be programmed independently at works. Heating function means that the contact opens as soon as the setpoint is reached, thus power interruption. At cooling function the contact closes, if the actual value is above the required setpoint. (see fig. 1 + 2)

A3: Function of contact K1 at sensor error
At sensor error the relay falls back into the condition pre-set here. If there is a data-loss in parameter memory (display indicates “EP”) both contacts K1 and K2 are switched off.

A8: Display mode
The value can be indicated in integrals or with decimals in 0,5°K or 0,1°K. At indication in 0,5°K the value is rounded up or down. In general, all parameter indications are presented in 0,1°K.

A10: Indication value for lower value linear analogue input
A11: Indication value for upper value linear analogue input
Only relevant, if the controller is programmed for a voltage input (0…10V linear) or a current input (4…20mA linear). These parameters allow scaling of the linear analogue input. The value to be indicated for the lower and upper entrance value then defines the range the controller will indicate. For input range 4…20mA the display will show sensor error if the input signal drops below 4mA.

A19: Parameter lock
This parameter enables locking of each parameter level. If third level is locked, only parameter A19 may be changed.

A30: Function alarm exit
The alarm exit evaluates an upper and a lower limit value (see parameters P30 and P31), whereas a selection is possible as to whether the alarm is active if the temperature lies within these two limits, or whether the alarm is released if the temperature lies beyond them. In the case of sensor error, the alarm is activated independently of this adjustment (see fig. 3 – 4 at parameters P30/31).

A31: Special function at boundary or range alarm
Here can be selected whether, in the case of an alarm, the indication to flash and/or the buzzer is to start. Sensor alarm (display F1L or F1H) is indicated independently thereof by flashing display and the buzzer.

A32: Setpoint display
A32=0 indicates the actual value, A32=1 statically indicates the setpoint S1 or S1’ in the display. Therefore, the current actual value can only be indicated with parameter P0.

A33: Adjustment of setpoint S1‘ (not available on all types of controllers)
By closing switching input E1, setpoint S1 can be switched to a setpoint S1’. Setpoint S1’ can be either relative to setpoint S1 or an independent, freely adjustable, control setting.
The setpoint S1’ can only be accessed if input E1 is closed. The setpoint S1’ can only be activated, if the external input is configured for setpoint change-over (parameter A81=2).

A40: Hysteresis mode contact K1
These parameters allow selection as to whether the hysteresis value which is adjustable with P32, is set symmetrically or one-sided at the respective switching point. At symmetrical hysteresis, half of the hysteresis' value is effective below and half of the value above the switching point. The one-sided hysteresis works downward with heating contact and upward with cooling contact (see fig. 1 + 2).

A50: Minimum action time contact K1 "On"
A51: Minimum action time contact K1 "Off"
These parameters permit a delay in switching on/off the relay in order to reduce the switching frequency. The adjusted time sets the entire minimum time period for a switching-on or switching-off phase.

A54: Delay after "Power-on"
This parameter allows a switching-on delay of relays after switching-on the mains voltage. This delay corresponds with the time set here.

A56: Alarm suppression after "Power-On"
This parameter allows a switching-on delay of the alarm contact after switching on the mains voltage or setpoint change-over. This delay corresponds with the time set here.

A60: Sensor type
These parameter permits selection of the sensor type, if the needed hardware prerequisites are available.

A70: Software filter
With several measuring values, it is possible to obtain an average value. This parameter can determine by how many measured values an average value is to be formed. If a sensor with a very fast reaction to external influences is used, an average value ensures a calm signal process.

A80: Temperature scale
Indication can be switched between Fahrenheit and Celsius. At conversion, the parameters and setpoints maintain their numerical value and adjustment range. (Example: A controller with the desired value of 0°C is switched to Fahrenheit. The new desired value is then interpreted as 0°F, which corresponds to a temperature of -18°C).
NOTE: Indication limits with °F can be smaller than the actual measuring range!

A81: Function E1
With this parameter function of the ext. input E1 can be set. With A81=0 the E1 is not evaluated. With A81=1 the controller is switched to the standby mode. With A81=2 setpoint S1 is switched to setpoint S1' when input E1 is closed.

A82: Function standby key
The following functions are available:

0: the respective key has no function
1: the controller is switched to standby mode

Status messages

Message	Cause	Error elimination
“AUS” or “OFF”	Standby modus, no regulation	Switch on by key or switching entrance
F1L	Sensor error, short-circuit at sensor F1	Check sensor
F1H	Sensor error, open-circuit at sensor F1	Check sensor
_ _ _	Key-lock active	Change parameter P19 or A19
display flashes	Temperature alarm at too high or too low temperature (if activated) see A31	
Buzzer	Temperature alarm at too high or too low temperature (if activated) see A31	The buzzer function can be switched off with the DOWN-key
EP, display flashes	Data loss at parameter memory (Contacts K1 and K2 are switched off)	If error cannot be eliminated by switching on/off, the controller must be repaired

Technical data of ST710-JG1JA.10

Input
E1: Switching input for an external potential-free switch, function see parameter A81

Measuring inputs
F1: Resistance thermometer PTC
Measuring range PTC (KTY81-121): -50,0°C...150°C
Measuring accuracy: 0,5K +/- 0,5 % of scale range, without sensor

Output
K1: Hybrid contact, consisting of
- relay, normally-open contact, 16(4)A 250V
  permanent current max. 12(4)A, limited by connectors and/or conductive strips
- TRIAC

Display
One 3-digit LED display for temperature indication
Three LEDs, for status display
LED 1: Status display of switching exit K1
LED 2: Status display of switching input E1

Power supply
230V 50/60Hz, Power consumption max. 4VA

Ambient conditions

Storage temperature:	-20°C...+70°C
Operating temperature:	0...55°C
Relative humidity:	max. 75%, without dew

Weight
ca. 140g, without sensor

Connectors
12-pole screw terminal, spacing 5.0 mm, for cable up to 2,5 mm²

Enclosure
Front IP65, IP00 from back

Installation data

Front size:	84 x 42 mm
Panel cut-out:	67,2 x 31,2 mm
Installation depth:	ca. 85 mm

Mounting by fixing strap