TRT252-31.34

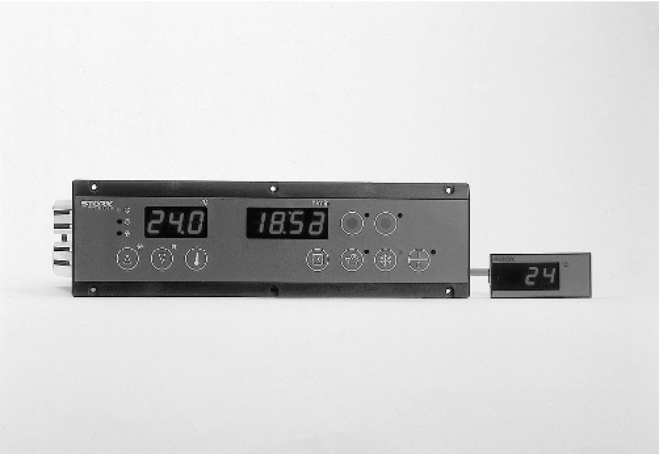

Temperature controller with LON interface

Order number 900177.048
Old Id.Nr.: 292656

Wiring diagram

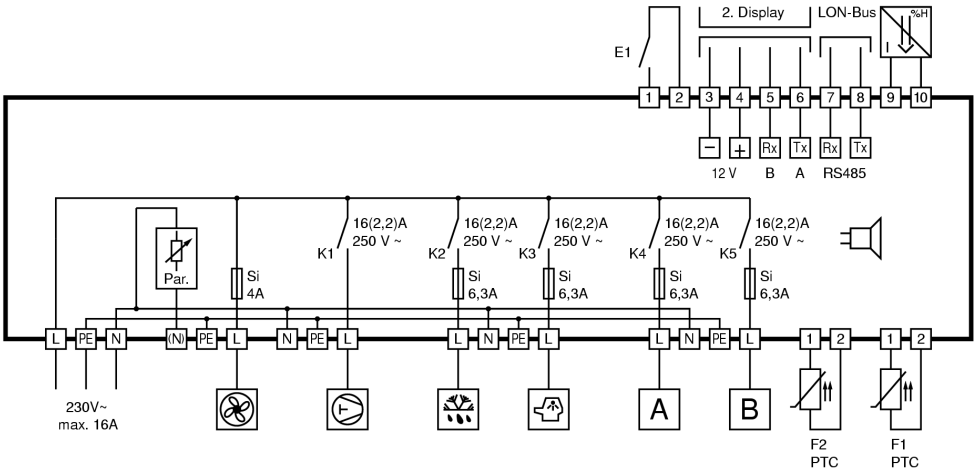

Product description

The flush panel control TRT252-30.34, designed as ready to plug-in unit, is specifically intended for refrigerators with complex control functions. It has two inputs for temperature sensors, five relays and an adjustable tension exit (ventilator). The LON interface RS485 permits communication with super-ordinate systems.
The integrated real-time clock, however, is a special feature of this control. It is possible to adapt the general functions and thus the gradient of the temperature in the refrigerator to the currently needed times.
Various parameters and an additional current- and/or switching input and a external satellite temperature display permit employment of the most various tasks.
Contacts of all inputs and outputs are special plug-in connectors. They are unmistakably marked with coloured and mechanical coding, strain-free and have a lock. Complex installations and wiring, therefore become redundant. Various possibilities in the organisation of the front design and a flexible control concept create options for customer-optimised solutions which hardly set any limits to wishes regarding service and installation comfort.

Sensor: PTC
Range: -55...99°C
Front size: 252mm x 72mm
Panel cut-out: 243mm x 51mm
Tightness: front IP63
Connector: plug and socket

TRT 252 ...

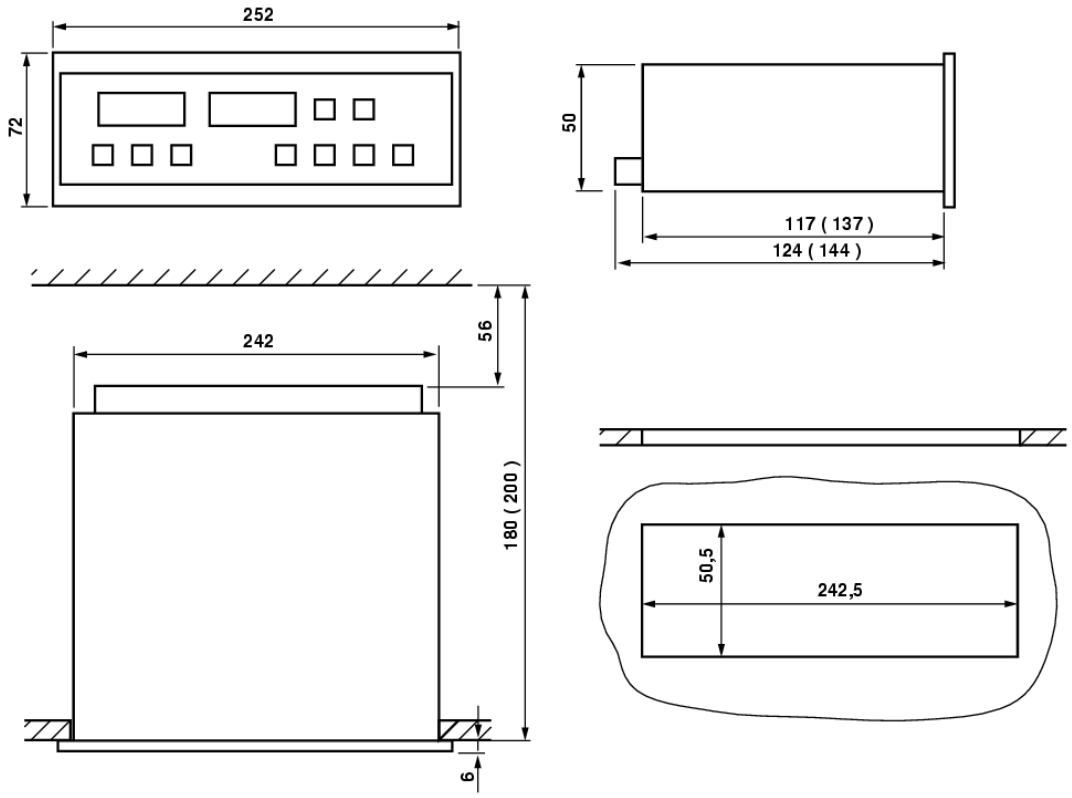

SOFTWARE .34

Adjustment options

Key UP:
Pressing this key you can increase the parameter or parameter value. Defrosting can be started any time by pressing the UP-key for 3 seconds.

Key DOWN:
Pressing this key you can decrease the parameter or parameter value. At alarm the buzzer function can be switched off with this key.

Key SET:
While SET key is pressed, the setpoint is indicated.
In addition, the SET key is used for setting parameters.

Key SET time:
The time display always indicates the actual time T1.
Pressing this key activates an adjusting mode.

Key light:
The output K3 (light) is switched on and the corresponding LED lights up.

Key cooling:
With this key the cooling is switched on or off. The key has to be pressed for at least half a second. The lamp in the display lights up if cooling is switched off and the unit is in standby mode.

Key StandBy
With this key the controller is switched to standby mode. Pressing the key a second time, restarts the unit. The LED lights up if the controller is in standby mode, all other displays are switched off. Switching on the unit activates the time display.

The condition of standby and cooling is preserved after a power failure. If cooling is switched off no temperature will be indicated. The controller can be parametered with cooling switched off but not in standby mode.

Blue key
Freely disposable: the corresponding output is switched on or off. The LED lights up if the output is switched on.
Additional function (set by parameter b4): adjusting the 2nd setpoint (Y1)

Red key
Freely disposable: the corresponding output is switched on or off. The LED lights up if the output is switched on.

First control level:

Adjusting the cold room setpoint and actual time

If none of the keys is pressed, the display indicates the actual value of the temperature and the actual time. Pressing the SET key, the setpoint shows on the display.
If the setpoint is to be changed, the SET key is to be kept pressed while adjusting the setpoint with the keys UP and DOWN.
Please note that the setpoint can only be changed within the set setpoint limits.
The time can be adjusted with the SET time key in the same way.

General reference
Note that the value is transferred to the captive memory and is safe also after power failure.

Para-meter	Function	Adjustment range	Standard setting	Customer setting
S1	Cold room setpoint S1 Please note: during night time reduction the setpoint S1 is decreased by the value of H6 to a new setpoint S1' S1' = S1 + H6	r1...r2	0.0°C	
T1	Actual time	00:00 ... 23:59		

Second control level (P-parameter):

Setting of control parameters
Simultaneously pressing the UP and DOWN key for at least 4 seconds opens a parameter list containing frequently used parameters (the complete list of all parameters is to be found on the third control level).
With the UP and DOWN keys the list can be scrolled in both directions.
Pressing the SET key will give you the value of the respective parameter. Pressing also the UP or DOWN key at the same time the value can be adjusted.
Return to the first control level takes place automatically, if no key is pressed for 60 seconds.

Para-meter	Function	Adjustment range	Standard setting	Customer setting
PA	Access to parameter list, password: -19	-99...+99	0	
r0	Hysteresis for the compressor contact	0.1...15 K	2 K	
P0	Indication of cold room temperature (sensor F1)			
P2	Indication of evaporator temperature			
H00	actual weekday	1: Sunday 2: Monday 3: Tuesday 4: Wednesday 5: Thursday 6: Friday 7: Saturday		
H01	Defrost time 1	00:00...24:00 (24:00 = inactive)	24:00	
H02	Defrost time 2	00:00...24:00 (24:00 = inactive)	24:00	
H03	Defrost time 3	00:00...24:00 (24:00 = inactive)	24:00	
H04	Defrost time 4	00:00...24:00 (24:00 = inactive)	24:00	
H05	Defrost time 5	00:00...24:00 (24:00 = inactive)	24:00	
H06	Night time reduction (increase)	-50...50 K (0 = ineffective)	0.0 K	
H07	End of night time reduction on Sunday	00:00...24:00 (24:00 = inactive)	24:00	
H08	Start of night time reduction on Sunday	00:00...24:00 (24:00 = inactive)	24:00	
H09	End of night time reduction on Monday	00:00...24:00 (24:00 = inactive)	24:00	
H10	Start of night time reduction on Monday	00:00...24:00 (24:00 = inactive)	24:00	
H11	End of night time reduction on Tuesday	00:00...24:00 (24:00 = inactive)	24:00	
H12	Start of night time reduction on Tuesday	00:00...24:00 (24:00 = inactive)	24:00	

Para-meter	Function	Adjustment range	Standard setting	Customer setting
H13	End of night time reduction on Wednesday	00:00...24:00 (24:00 = inactive)	24:00	
H14	Start of night time reduction on Wednesday	00:00...24:00 (24:00 = inactive)	24:00	
H15	End of night time reduction on Thursday	00:00...24:00 (24:00 = inactive)	24:00	
H16	Start of night time reduction on Thursday	00:00...24:00 (24:00 = inactive)	24:00	
H17	End of night time reduction on Friday	00:00...24:00 (24:00 = inactive)	24:00	
H18	Start of night time reduction on Friday	00:00...24:00 (24:00 = inactive)	24:00	
H19	End of night time reduction on Saturday	00:00...24:00 (24:00 = inactive)	24:00	
H20	Start of night time reduction on Saturday	00:00...24:00 (24:00 = inactive)	24:00	

H00: actual weekday
If night time reduction is used the clock has to be set right to prevent malfunctions.

H01 ... H05: Defrost time
At the respective defrost times the clock triggers off a defrost start. At the same time the interval defined with d0 is started.
If the parameter is set to “24:00” the defrost will not be carried out.

Note: If the defrost times of the real time clock are used the defrost interval (parameter “d0”) should be set to “0”.

H6: Night time reduction
H07...H20: Start and end times of night time reduction
The night time reduction is activated by the clock according to the start and end times set with parameters H7 … H20. During the reduction the parameter S1’ is effective for the control. S1’ is the sum of S1 (daytime setpoint) and H6 (reduction value), i.e. S1’ = S1 + H6. As the reduction value can take negative or positive values both a reduction and an increase are possible.

For each day a start and end time can be set. These times are processed in chronological order. In general the switch off of the night time reduction takes place first (early in the morning, e.g. H6=”05:00”) and afterwards the switch on (in the evening, e.g. H7=”20:00”). To achieve a calculated increase these times can be inverted: the reduction is activated in the morning (H7=”05:00”) and deactivated in the evening (H6=20:00).

If a continuous reduction is desired for a certain day (e.g. Sunday) the corresponding parameters (e.g. H7, H8) can be set to “24:00” and therefore are disregarded.

The programming is analogue to a mechanic timer switch, where a marker for switch-on and one for switch-off times can be set daily

Third control level (all parameters):

Setting of control parameters
Access to the third control level is granted when selecting parameter PA on the second control level. Parameter PA is to be set at '**-19**'. Then the key UP and DOWN have to be simultaneously pressed for approx. 4 seconds which will give access to the third control level, beginning with parameter P0. With the keys UP and DOWN you can scroll the list in both directions. Pressing the SET key will give you the value of the respective parameter. By pressing the UP or DOWN key at the same time the value can be adjusted.
Return to the initial position takes place automatically, if no key is pressed for 60 seconds.

Parameters for controller specifications

Para-meter	Function	Adjustment range	Standard setting	Customer setting
P0	Indication of cold room temperature (sensor F1)	N/A	N/A	
P1	Calibration sensor F1, actual value correction	-9.9...9,9 K	0.0 K	
P2	Indication of evaporator temperature (sensor F2)	N/A	N/A	
P3	Calibration sensor F2, actual value correction	-9.9...9.9 K	0.0 K	
P4	Sensor type F1	1: KTY 2: PT1000 3: NTC	1	
P5	Sensor type F2	0: inactive 1: KTY 2: PT1000 3: NTC	1	
P6	Display mode cold room temperature	0: with decimals 1: without decimals	0	
P7	Temperature scale	0: Fahrenheit (50Hz) 1: Celsius (50Hz) 2: Fahrenheit (60Hz) 3: Celsius (60Hz)	1	

Parameters for the cooling controller

Para-meter	Function	Adjustment range	Standard setting	Customer setting
r0	Hysteresis for the compressor contact	0.1...15 K	2 K	
r1	Setpoint limitation (minimum)	-99...r2°C	-50°C	
r2	Setpoint limitation (maximum)	r1...+99°C	50°C	

Parameters for the protection of the compressor

Para-meter	Function	Adjustment range	Standard setting	Customer setting
c0	Start protection of the compressor after "cooling on"	0...15 min.	0 min.	
c1	Start protection after compressor start	0...15 min.	5 min.	
c2	Start protection after compressor stop	0...15 min.	3 min.	
c3	Function in the case of error of sensor F1	0: compressor off 1: compressor on 2: compressor according c5	0	
c4	Switching delay compressor relay	0: no delay 1: 3 sec. delay	0	
c5	Time for “compressor on” at sensor error	1 ... 99 min.	15 min.	

Parameters for defrosting

Para-meter	Function	Adjustment range	Standard setting	Customer setting
d0	Defrosting interval	0...99 Std. 0 = inactive	8	
d1	Defrosting mode	0: electrical 1: with hot gas	0	
d2	Defrosting temperature	-55...+99°C	10°C	
d3	Defrosting time limit	1...99 min.	30 min.	
d4	Function after "cooling on"	0: immediate cooling, no defrost 1: first defrosting, then cooling	0	
d5	Defrost delay after “cooling on”	0...30 min.	0 min.	
d6	Indication of the cold room temperature during defrosting	0: actual temperature 1: temperature determined just before the start of defrosting	0	
d7	Drainage time	0...15 min 0: no drainage	2 min.	
d8	Alarm suppression time after defrosting	0...15 h	1 h	
d9	Execution of defrost demand	0: dependent execution 1: immediate execution 2: temperature decrease before defrosting	1	
db	Time base defrost cycle	0: standard time basis 1: reduced time basis	0	
dC	Temperature decrease before defrosting	-20...0 K	0	
dF	Time limitation for temperature decrease	0...999 Min	60	
dH	Waiting after defrost	0: not activated 1: activated	0	
dU	Manual defrosting	0: no defrost 1: manual start	0	

Parameters for alarm- and error conditions

Para-meter	Function	Adjustment range	Standard setting	Customer setting
A0	Hysteresis for alarm contact	1...15 K	2 K	
A1	Minimum limit value	-55...0 K 0= inactive	-10 K	
A2	Maximum limit value	0...+99 K 0= inactive	10 K	
A3	Alarm suppression time after “cooling on”	0...15 Std.	2 h	
A4	Effect of external alarm input	N/A		
A5	Alarm suppression time after temperature alarm	0...60 min.	10 min.	
A6	Alarm limits	0: relative to the setpoint 1: absolute	0	
A7	Alarm suppression time after night time reduction	0...60 min.	10 min.	

Parameters for the ventilator

Para-meter	Function	Adjustment range	Standard setting	Customer setting
F0	Ventilator control	0: dependent on temperature 1: continuous on	0	
F1	Ventilator setpoint	-99...+99°C	-1°C	
F2	Switching hysteresis ventilator	2...15 K	2 K	
F3	Behaviour at compressor stop	0: ventilator independent of compressor 1: ventilator off together with compressor	1	
F4	Behaviour at defrosting	0: ventilator independent of defrosting 1: ventilator off together with defrosting 2: ventilator on together with defrosting	1	
F5	Ventilator delay time after defrosting	0...15 min.	2 min.	
F6	Ventilator control	0: absolute control 1: dynamic control	0	
F7	Ventilator revolution number at normal cooling operation	0...100%	100%	
F8	Ventilator revolution number during night time reduction	0...100%	100%	
F9	Ventilator revolution number at defrosting	0...100%	100%	

Parameters for the configuration of the inputs and outputs

Para-meter	Function	Adjustment range	Standard setting	Customer setting
b0	Function of input E1	0: no function 1: start defrosting	0	
b1	Switch mode of input E1	0: normally-open contact 1: normally-closed contact	0	
b2	Function of input E2	0: no function 1: start defrosting	0	
b3	Switch mode of input E2	0: normally-open contact 1: normally-closed contact	0	
b4	Lock keys during “cooling off”	0...31 (explanation see table below)	0	
U1	Function output K1	0: compressor 1: defrosting 2: light 3: blue key 4: red key 5: alarm 6: ventilator 7: current input 8: current input (+cooling on + defrosting off)	0	
U2	Function output K2	0...8 (see U1)	1	
U3	Function output K3	0...8 (see U1)	2	
U4	Function output K4	0...8 (see U1)	3	
U5	Function output K5	0...8 (see U1)	4	
U6	Function output K6	0...8 (see U1)	5	
YA	Activation	0: not active 1: 0..20mA 2: 4..20mA	0	
Y0	Indication of actual value	N/A	N/A	
Y1	Setpoint	Y6...Y7	0	
Y2	Heating/cooling	0: heating 1: cooling	0	
Y3	Hysteresis	0,1...15K	1	
Y4	Indication value 0/4mA	-99...999,0	0	
Y5	Indication value 20mA	-99...999,0	100	
Y6	Lower setpoint limitation	-99...999,0	0	
Y7	Upper setpoint limitation	-99...999,0	100	

Parameters for serial interface

Para-meter	Function	Adjustment range	Standard setting	Customer setting
L0	Individual address (Node)	1...126	1	
L1	Individual address (Subnet)	1...255	1	
L2	Number of slaves	0...63	0	
L9	Log on mode to LON net	0...255 Bit 0: data logger Bit 1: plug and play	3	
Lr	Reset parameters	0: no reset 1: reset parameters, including Lr	0	

Parameter description:

P0: Indication of cold room temperature (F1)
P2: Indication of evaporator temperature (F2)
The here indicated temperatures present the sum of the respective actual measured value of feeler F1/F2 and the actual value correction according to parameter P1/P3.

P1: Calibration sensor F1
P3: Calibration sensor F2 (evaporator)
This parameter allows the correction of actual value deviations caused for example by sensor tolerances or extremely long sensor lines. The regulation measure value is increased or decreased by the here adjusted value.

P4: Sensor type F1
P5: Sensor type F2
This parameter permits selection of the sensor type, if the needed hardware prerequisites are available. If the evaporator sensor F2 is disabled (P5=0) the parameters d2, F0, F1 and F2 become ineffective.

P6: Display mode
The value can be indicated in integrals or with decimals. In general, all parameter indications are presented with decimals.

P7: Temperature scale
Adjustment of the desired temperature scale and net frequency.

r0: Hysterese for the compressor contact
Parameter r0 sets the temperature margin between switching off and switching on of the compressor. A small hysteresis permits a more exact regulation, however also leads to more frequent switching of the compressor. The hysteresis is set one-sided above the setpoint

r1: Setpoint limitation (minimum)
r2: Setpoint limitation (maximum)
These parameters limit the adjustment range of the setpoint S1, in order to avoid that the end user sets inadmissible values for the plant.

c0: Start protection of the compressor after "cooling on"
After cooling is switched on (e.g. by switching on the mains voltage) the start of the compressor is retarded until the protection running time is over. This secures e.g. that several cooling units do not start at the same time and load the electricity supply net.

c1: Start protection of the compressor after compressor start
This time protection starts when the compressor is switched on. After switching the compressor off, a renewed switching on is impossible until this protection time runs out. This prevents from too frequent switching-on of the compressor and thus increases its life span.

c2: Start protection of the compressor after compressor stop
This time protection starts when the compressor is switched off. After switching the compressor off, a renewed switching on is impossible until this protection time runs out.

c3: Function in the case of error of refrigerating chamber sensor F1
Here is determined whether the compressor keeps running or not in the case of an error of the refrigerating chamber feeler F1. When deep-freezing, the compressor should normally continue running, in order to prevent de-frosting of the goods. At the normal cooling range above 0 °C, a continuation, however, could lead to frost damages.

If the compressor has to keep running this can happen either permanently or with a ratio of on and off times, which can be adjusted with parameter c5. The off-time is 15 minutes and not adjustable.

c4: Switching delay of the compressor relay
If demanded the compressor can switch immediately or with a time delay.

c5: Time for “compressor on” at sensor error (see c3)

d0: Defrosting interval
The defrosting interval defines the time, after which a defrosting process is started. With the beginning of the defrosting process, the defrosting interval starts anew, which results in periodic defrosting in firm intervals.
Defrosting can also be started with the clock or by pressing the key "manual defrosting" for at least 3 seconds. This automatically restarts the defrosting interval. If defrosting is only started with the clock the defrosting interval can be deactivated.
If the value of d0 is changed this effects only the next defrost cycle.

d1: Defrosting mode
This parameter determines whether defrosting is effected by an electrical heating coil (d1=0) or by means of hot gas (d1=1).

d2: Defrosting temperature
The defrosting process is terminated when the evaporator has reached the adjusted temperature. (Always provide good thermal contact between evaporator sensors and lamellas).
In case that defrosting takes too long, the time limit set in "d3" will come into effect.

d3: Defrosting time limit
Here the maximal defrosting time can be adjusted. According to this time frame, defrosting is terminated even if the evaporator is not warm enough to be ice-free.

d4: Function after "cooling on"
After “cooling on” cooling can start immediately and defrosting starts after the defrost interval or defrosting can start immediately and then the defrost interval is started.
For deep-freezing applications the immediate defrosting is recommended since a defrost cycle might be skipped in case of a power failure and therefore the evaporator might be iced up.

d5: Defrost delay after “cooling on”
After “mains on” the defrosting starts after the here adjusted delay (only effective if d4=1).
Among other things this is to prevent energy peaks.

d6: Indication of the refrigerating chamber temperature during defrosting
It is to be assumed that the cold room temperature slightly rises during the defrosting process. d6=0 indicates the actual cold room temperature during the defrosting process. d6=1 indicates the temperature determined just before the start of defrosting until the setpoint of the refrigerating chamber is reached again after the defrosting process is completed. Thus, an irritation of the operator during defrosting can be avoided. In the case of emergency, the display flashes and the actual temperature of the cold room is indicated.

d7: Drainage time
Completed defrosting is immediately followed by a drainage period, in order to let the evaporator drip off. During drainage time, the exits compressor and ventilator are switched off.

d8: Alarm suppression time after defrosting
A temperature alarm caused by the warming up of the refrigerating chamber during defrosting will be suppressed for this time period after defrosting has finished.

d9: Execution of defrost demand
With d9 = 0 the defrost demand will be prevented as long as the locking conditions of parameters c0, c1 and c2 apply. With d9 = 1 defrosting starts independently of these parameters.
During defrosting there is an increase of the refrigerating chamber temperature. This can be specially noticed if there is a high temperature when starting defrosting. With d9=2 a cooling cycle takes place before defrosting for the temperature difference to the setpoint set with dC.
If cooling takes to long the time limit set with dF applies.

db: Time base defrost cycle
This parameter changes the time base for the defrosting cycle. With parameter set to “1” hours become minutes and minute become seconds. This allows a quick control and monitoring of the refrigeration plant during installation and maintenance.

dC: Temperature decrease before defrosting
only effective if d9=2

dF: Time limitation for temperature decrease
see d9 and dC.

dU: start manual defrosting (only required in combination with data logger)
With dU = 1 the defrost interval is started prematurely. The following automatic defrost takes place after the time period d0 (synchronisation of the defrosting)

dH: Waiting after defrost
This parameter is used for open cooling systems when several controllers control one cold room. By linking the network variables a common defrost start can be realised. The parameter dH prevents the controllers from switching back from defrosting to cooling mode at different times. If dH is set to “1” the starting of the compressor is delayed until the time “d3” (defrosting time limit) expires.

dU: start manual defrosting (only required in combination with data logger)
With dU = 1 the defrost interval is started prematurely. The following automatic defrost takes place after the time period d0 (synchronisation of the defrosting)

Defrosting in a network
A central defrosting by means of the integrated real time clock is possible in different ways:
1. via network variables:
   Together with a suitable linking tool these variables permit to realise any controller configuration.
2. via explicit messages (Störk-Tronic protocol):
   The number of connected slaves can be set with parameter L2 (“0” = no network defrosting). Their addresses start from the one of the master controller (“L0”) upwards. If the master has the address “1” the first slave will have “2” and so on …
   If the master receives a defrost demand it will pass it to all slaves. If a slave doesn’t answer the display indicates the message “F90”. Please check the network connection in this case.
   In case of defrosting during network operation the automatic internal defrosting of the slaves should be switched off (“d0”=0).
   Any manual defrosting has no effect on the other networked controllers.

A0: Hysteresis for alarm contact
The hysteresis of the alarm contact is asymmetrically, set downward at the maximum alarm value upward at the minimum alarm value.

A1: Minimum limit value
A2: Maximum limit value
The limit values serve for monitoring of the cold room temperature. They can be relative, i.e. going along with the setpoint S1 or absolute. Alarm is released when exceeding maximum limit value or when falling below the minimum limit value:
The actual value display flashes, the buzzer (if available) goes off intermittently and the actual temperature of sensor F1 is indicated (if there is no sensor error).
At A1=0 or A2=0 the respective limit value alarm is inactive. The buzzer can be turned off with the DOWN key, the display continues flashing until the alarm is turned off.

A3: Alarm suppression time after "cooling on"
After switching cooling on, an alarm is suppressed for the adjusted time, i.e. the refrigerant plant can get to work temperature without releasing alarm.

A4: Effect of external alarm input
Parameter ineffective in this unit execution.

A5: Alarm suppression time after temperature alarm
If the refrigerating chamber temperature exceeds the limit values adjusted at A1, A2, normally a temperature alarm should be released.
With the suppression time set at A5 the alarm release can be delayed

A6: Type of alarm limits
see A1, A2

A7: Alarm suppression time after night time reduction
After each switching process of the night time reduction (activation or deactivation) the alarm is suppressed for this time period.

In general the ventilator is supposed to be connected to the evaporator and the corresponding temperatures are determined by the evaporator sensor.

F0: Ventilator control
At setting "0" the control is dependent of temperature with the ventilator setpoint F1 or according to the setting F6=1 (dynamic control).
At setting "1" the ventilator is permanently on assumed that it is not stopped bye the setting F3=1 (off at compressor stop) or F4=1 (off at defrosting).

F1: Ventilator setpoint
As soon as the evaporator temperature falls below the ventilator setpoint (with hysteresis) the ventilator is switched on and vice versa. Above the setpoint the ventilator is off.

F2: Switching hysteresis ventilator
The hysteresis is set one-sided and below the ventilator setpoint.

F3: Behaviour at compressor stop
With F3=0 the ventilator operation is independent of the compressor (standard refrigeration range above 0°C).
With F3=1 the fan is switched of if the compressor is switched off.

F4: Behaviour at defrosting
With F4=0 the ventilator continues to run during defrost (standard refrigeration range above 0°C).
With F4=1 the ventilator is stopped during defrost (deep-frying range).
With F4=2 the ventilator is on together with defrosting (suitable, if there is no active defrosting device).

F5: Ventilator delay time after defrosting
Following drainage time d7, start of the ventilator can be delayed until the evaporator has sufficiently cold air again. If the ventilator started immediately, the warm air resulting from the defrosting process would probably be blown into the refrigerating chamber

F6: Ventilator control
With F6=0 the ventilator is controlled depending on ventilator setpoint F1
With F6=1 the ventilator control is dynamic.
In this case the absolute setpoint adjusted with F1 is no more effective but the ventilator setpoint depends directly on actual value of the refrigerating chamber. The ventilator setpoint results of the refrigerating chamber temperature minus the relative evaluated temperature set in F1.
Example: settings F1 = 5, F2 = 2, F6 = 1
The ventilator setpoint is always 5K below the refrigerating chamber temperature. If the refrigerating chamber temperature is 10°C the ventilator will switch off if the evaporator temperature is above 5°C and the ventilator will switch on if the evaporator temperature falls below 3°C. If the refrigerating chamber temperature is 9°C the ventilator will switch off if the evaporator temperature is above 4°C and the ventilator will switch on if the evaporator temperature falls below 2°C.
This variant makes it possible to switch the ventilators delayed dependent on temperature at each temperature start (start-up relief) or to switch them off delayed after compressor stop (usage of the refrigerating capacity of the evaporator).

F7: Ventilator revolution number during normal cooling operation
F8: Ventilator revolution number during night time reduction
F9: Ventilator revolution number during defrosting
The ventilator speed can be set infinitely variable by the software. In “Off” condition the ventilator speed is reduced to 0. Irrespective of this setting there is always a “kick-start” for the ventilator, i.e. it starts with full speed for 10 seconds.
During night time reduction or defrosting you can choose a different speed (night time operation is controlled by parameter H21).

b0: Function of switching input E1
b2: Function of switching input E2
A function of the list can be assigned to both of the switching inputs.

b1: Switching sense of switching input E1
b3: Switching sense of switching input E2
To execute an action the switching inputs either have to be opened or closed.

b4: Locking of switching function if “cooling off” (see table on next page)
Any switching functions can be assigned to the three keys “Light”, “Red” and “Blue”. Sometimes it is desirable that the switching functions are only active if cooling is switched on. This can be set with this parameter for every individual key.

“Independent”: the switching function is **not** dependent of the condition of cooling.
“Off with cooling off”: switching function is locked if cooling is switched off.

An additional special function can be assigned to the blue key. The second setpoint (Y1) for the analogue input can be adjusted directly by the blue key (please don’t forget to release the switching function by means of “Y0” and to assign a corresponding output with the “U”-parameters – recommendation: usually“U4” is available if the blue key is left out).

Value	"Light"	"Blue key"	Control LED "blue key"	"Red key"
0	independent	independent	see left column	independent
1	off with „cooling off“	independent	see left column	independent
2	independent	off with „cooling off“	see left column	independent
3	off with „cooling off“	off with „cooling off“	see left column	independent
4	independent	independent	see left column	off with „cooling off“
5	off with „cooling off“	independent	see left column	off with „cooling off“
6	independent	off with „cooling off“	see left column	off with „cooling off“
7	off with „cooling off“	off with „cooling off“	see left column	off with „cooling off“
8	independent	Adjusting Y1	like U parameter: 7*	independent
9	off with „cooling off“	Adjusting Y1	like U parameter: 7*	independent
10	independent	Adjusting Y1	like U parameter: 7*	independent
11	off with „cooling off“	Adjusting Y1	like U parameter: 7*	independent
12	independent	Adjusting Y1	like U parameter: 7*	off with „cooling off“
13	off with „cooling off“	Adjusting Y1	like U parameter: 7*	off with „cooling off“
14	independent	Adjusting Y1	like U parameter: 7*	off with „cooling off“
15	off with „cooling off“	Adjusting Y1	like U parameter: 7*	off with „cooling off“
16	independent	independent	see left column	independent
17	off with „cooling off“	independent	see left column	independent
18	independent	off with „cooling off“	see left column	independent
19	off with „cooling off“	off with „cooling off“	see left column	independent
20	independent	independent	see left column	off with „cooling off“
21	off with „cooling off“	independent	see left column	off with „cooling off“
22	independent	off with „cooling off“	see left column	off with „cooling off“
23	off with „cooling off“	off with „cooling off“	see left column	off with „cooling off“
24	independent	Adjusting Y1	like U parameter: 8*	independent
25	off with „cooling off“	Adjusting Y1	like U parameter: 8*	independent
26	independent	Adjusting Y1	like U parameter: 8*	independent
27	off with „cooling off“	Adjusting Y1	like U parameter: 8*	independent
28	independent	Adjusting Y1	like U parameter: 8*	off with „cooling off“
29	off with „cooling off“	Adjusting Y1	like U parameter: 8*	off with „cooling off“
30	independent	Adjusting Y1	like U parameter: 8*	off with „cooling off“
31	off with „cooling off“	Adjusting Y1	like U parameter: 8*	off with „cooling off“

(*) The control LED of the blue key is either parametered to the switching function “current input” (regulates always) or “current input + cooling on” (regulates only if cooling is on and no defrosting takes place).

U1-U6: Function of the outputs K1-K6
Each output controlled by the software can be optionally assigned to each of the available relays. Thus a variety of applications can be realised with the available relays.
The setting “6” (ventilator) is only used with units without number of revolutions control. The correspondingly configured relay is switched on if the ventilator speed is > 0%.

YA: Activation of characteristic curve
There are two operating modes to choose from: 0...20mA and 4...20mA
(accepted value range for setting “1”: 0...21,5mA
for setting “2“: 3,5...21,5mA)

Y0: Indication of the measuring value of current input
The actual value is indicated according to parameters Y4 and Y5.

Y1: Setpoint

Y2: Heating/Cooling
In operation mode “heating” the output relay is activated if the temperature falls below the setpoint. in operation mode “cooling” it is just the reverse.

Y3: Hysteresis
The hysteresis is set one-sided below (heating) or above (cooling) the setpoint.

Y4: Indication value for lower value at linear analogue input
Y5: Indication value for upper value at linear analogue input
These parameters assign the indication range to the measuring range.

Y6: Lower setpoint limit
Y7: Upper setpoint limit

L0: Individual address (Node)
L1: Individual address (Subnet)
STOERK TRONIC devices can be hooked with "self installation". In this case, however, each participant has to be assigned a clear address. This address corresponds to the knot address and subnet address with Domain=0.
The address of the knot can only be changed, if the knot was not tied externally (SNVT "nciNetConfig" = CFG_LOCAL), otherwise the changed value is not saved (after releasing the set key the old value is reset).

L2: Number of Slaves
This is the number of slaves which have to receive a defrost demand via the network.
The slave addresses start with controller address (“L0”+1).

L9: Log on mode to LON net
At standard setting the controller tries to log onto the data logger as soon as it is switched on. After that it sends a self identification by broadcast. Both network messages can be suppressed separately to prevent possible network collisions.

Lr: Parameter Reset
This parameter is special as it can reset all parameters to the condition ex works. At setting Lr = 1 reset takes place, and Lr itself is reset to zero again. Note that customised values will become effective if these were adjusted prior to delivery.

LON-Bus, serial communication

Definition of the standard network variables (SNVT und SCPT)
The standard network variables correspond the type „Refrigerated Display Case Controller“ (with supplementations) and the control object „0“ (minimal requirements with supplementations).

Thermostat object (Refrigerated Display Case Controller)				
Name of variable	Type	Input/Output	Values	Description
nvoThermState	SNVT_state	Output	Bit 0: ON Bit 1: cooling Bit 2: OFF Bit 3: night reduct.	Status thermostat: cooling and night time reduction
nvoAirTemp	SNVT_temp_p	Output	-100...+150°C 0x7fff: sensor error	room temperature
nvoDischargeTemp	SNVT_temp_p	Output	-100...+150°C 0x7fff: sensor error	evaporator temperature
nvoCutoutTemp	SNVT_temp_p	Output	-100...+150°C	setpoint output
nvoDefrostState	SNVT_defr_state	Output	DF_STANDBY DF_DEFROST DF_DRAINDOWN	defrost condition
nvoDayNight*	SNVT_lev_disc	Output	ST_OFF/ST_ON	night time operat.
nvoActState*	SNVT_state	Output	Bit 0: compressor Bit 1: ventilator Bit 2: defrost Bit 3: alarm	switching conditions
nvoSwitch	SNVT_lev_disc	Output	ST_OFF/ST_ON	-reserved-
nviDayNight	SNVT_lev_disc	Input	ST_OFF/ST_ON	external night time reduction
nviCutoutTemp*	SNVT_temp_p	Input	-100...+150°C	setpoint
nviDefrostState	SNVT_defr_state	Input	DF_STANDBY DF_DEFROST	defrost demand
nviSwitch	SNVT_lev_disc	Input	ST_OFF/ST_ON	-reserved-
nviPower	SNVT_lev_disc	Input	ST_OFF/ST_ON	controller condition (on / standby)
nciMaxSendTime	SNVT_time_sec	Input	0...32000s	max. time to update variables
„Object 0“				
nvoStatus	SNVT_obj_status	Output	-> SNVT list invalid_id invalid_request	Object status (min. requirements.)
nciNetConfig	SNVT_config_src	Input	CFG_EXTERNAL CFG_LOCAL	Node configured extern or intern
nvoAlarm	SNVT_alarm	Output	see below***	alarm condition
nviRequest	SNVT_obj_reque st	Input	-> SNVT Liste	Object Request

* SNVTs, which are added to the corresponding standard object.

*** The unit has two different alarm conditions:
Hardware error (sensor error, clock, Eeprom error): alarm_type=0x83; priority_level=2
Temperature error (too high or too low temperature): alarm_type=0x82; priority_level=1

Automatic update of variables
At each adjustment of the values in the controller the corresponding output variables are updated. If there are no condition changes the values will be updated every “nciMaxSendTime” seconds. If “nciMaxSendTime” is less than 1.0 sec. the values are no more updated in intervals but only if there is any change.
(Therefore the following can occur: a master controller determines the setpoint of a slave controller. The setpoint of the slave controller will be updated immediately if there is a change at the master controller. If the setpoint is changed at the slave controller the “correct” value will be send to the slave after “nciMaxSendTime” seconds.)

Connection information
Simultaneously pressing all keys sends a „Service-Pin“ message (the program version of the software is indicated in the display.
The controller responds to a “wave” command with a display flashing 3 times.
Note that if a data logger is used the node number will change at connection (the domain must remain “0”. After a controller reset the new address can be queried with parameter “L0” and “L1”. These parameters may not be changed after connection (ensured by “nciNetConfig“).

Data logger protocol

Parameter values (read/write)		
Adjustable parameters:	P1,P3,P4,P5,P6,P7,r0,r1,r2,c0,c1,c2,c3,c4,c5,d0,d1,d2,d3,d4,d5,d6,d7,d8,d9,dB,dC,dF,dH,dU,A0,A1,A2,A3,A4,A5,A6,A7,F0,F1,F2,F3,F4,F5,F6,F7,F8,F9,b0,b1,b2,b3,b4.U1,U2,U3,U4,U5,U6,YA,Y2,Y3,Y4,Y5,Y6,Y7,L0,L1,L2,L9,H0,H1,H2,H3,H4,H5,H6,H7,H8.H9,H10,H11,H12,H13,H14,H15,H16,H17.H18,H19,H20,T0 (time)	
Adjustable setpoints	S1,Y1	
Actual values (only read)		
Actual value temperature refrigerating chamber	A1	0
Actual value temperature evaporator	A2	1
Actual value current input	A3	2
Controller status (only read)	D1 Bit 0: „cooling on“ Bit 1: „defrosting active“ Bit 2: „night time reduction“ Bit 3: „controller on“ Bit 4: "compressor" Bit 5: "defrost relay" Bit 6: „light“ Bit 7: switching condition „blue key“ Bit 8: switching condition „red key“ Bit 9: „ventilator on“ Bit 10: switching condition „current input“ [U-parameter = 7] Bit 11: switching condition „current input“ [U-parameter = 8] Bit 12: Switching input 1 Bit 13: Switching input 2 Bit 14: Bit 15: Internal alarm condition	3
Status (adjustable by the logger)		
Controller status	D1 Bit 0: „cooling on“ Bit 1: „defrosting active“ Bit 2: „night time reduction“ Bit 3: „controller on“ Bit 4: Bit 5: Bit 6: „light“ Bit 7: switching condition “blue key“ Bit 8: switching condition “red key“ Bit 9: switching condition "ventilator" Bit 10: Bit 11: Bit 12: Bit 13: Bit 14: Bit 15:	0

Status messages

Message	Cause	Error elimination
E0	Sensor error F1, open or short circuit	Check sensor
E1	Sensor error F2, open or short circuit	Check sensor
EP	Data loss at parameter memory	Severe hardware error*
F90	Network error	Check network
Ur0-UrF	Real time clock error	See following table

Real time clock error:
In case of a real time clock error the exact cause is indicated by the last figure of the display with a hexadecimal code (“0”-“F”). This code is formed by the sum of the error values of the following table:

Error value	Meaning	Cause
1	Time inconsistency	Hardware error
2	Valid time range exceeded	Hardware error
4	First-Time-Up => first clock setting	Time info lost / change backup battery
8	Clock has stopped	Hardware error

In practice the error “Ur4” will occur most frequently. In this case the user has to reset the clock. The error indication is active even in standby mode. However the error message can only be cancelled if the controller is switched on.

Occurring errors are indicated with a flashing display and the buzzer sounds.

* If the display indicates a “EP” error the controller has located undesirable change of the parameter settings in the EEprom. This indication can not be cancelled. The controller has to be exchanged immediately! In this case the compressor and the ventilator switch to emergency operation (15 min. on/15 min. off).

<u>Common problems:</u>

Setting of the ventilator setpoint with F7 is not possible
In case of an automatic day/night operation the night time reduction is activated as soon as the light is switched off (depending on parameter H21). Therefore setpoint F8 becomes effective instead of setpoint F7. If the light is switched on setpoint F7 is active again. If no night time reduction is desired both F7 and F8 should be set to the same value.

As soon as the light is switched off the compressor is switched off too.
In case of automatic night time reduction the value of P6 will be added up to the setpoint. If the light is switched off the new setpoint is active.
Remedy: set H6 back to “0”.

A change of the defrost interval d0 shows no effect.
The change is not effective until the next defrost period has started (or after mains on).

Technical data of TRT252-31.34

Input
E1: External potential-free switching input, function see parameter b0.

Measuring input
F1: Resistance thermometer PTC, counter temperature, plug colour white
F2: Resistance thermometer PTC, evaporator sensor, plug colour red
Measuring range: -55 °C...+99°C
F3: Current input 0-20mA
Measuring accuracy: 0.5 % of scale range, without sensor

Outputs
S1: Triac, 4A, 230V (0...100 % linear)
with 4A T fuse, potential-free, ventilator
K1: Relay, 16A 250V, without fuse, see parameter U1
K2: Relay, 16A 250V, with 6.3A T fuse, see parameter U2
K3: Relay, 16A 250V, with 6.3A T fuse, see parameter U3
K4: Relay, 16A 250V, with 6.3A T fuse, see parameter U4
K5: Relay, 16A 250V, with 6.3A T fuse, see parameter U5
Relays K1 up to K5 are potential-afflicted
Additional buzzer, 85dB

Display
One 3-digit LED-Display, height 13mm, for temperature display, colour red, including the switching condition display for the output relays
One 4-digit LED-Display, height 13 mm, colour red, for internal real time clock
8 LEDs, for status display

LON communication interface
shielded 2-wire line, Twisted Pair, 78kBaud, not polar, maximum cable length 100m
Interface driver: RS485, galvanically not separated.
The network must be installed in lines topology and be terminated with a resistance of 120 Ohm each on both sides.

Power supply
230V 50Hz, max. 10VA

Ambient conditions:

Storage temperature:	-20...+70°C
Operating temperature:	0...55°C
Relative humidity:	max. 75%, without dew

Enclosure
Front IP63, IP00 from back

Installation data
Unit is to be installed in an instrument panel.

Front size:	252 x 72 mm
Panel cut-out:	242.5 x 50.5 mm
Installation depth:	ca. 200 mm