ST58-GB1TB.10

Temperature controller

Order number 900144.004

As of: 11.07.2019

Wiring diagram

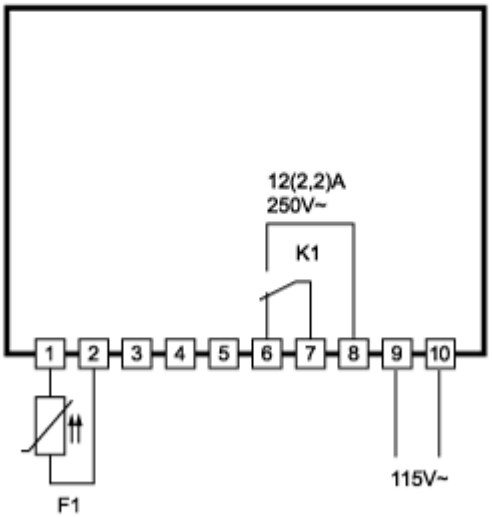

Product description

The controller ST58-GB1TB.10 was developed for simple thermostatic applications. The unit disposes of a connection for resistance sensor PTC or Pt100. It is supplied with a voltage of 115V AC and has an exit relay with an Ohm maximum electric load of 16A. Inductive loads can be connected with up to max. 2,2A permanent current.

Sensor: Pt100, PTC
Range: dependent on the type of sensor
Front size: 62mm x 28mm
Panel cut-out: 58,2mm x 25,2mm
Tightness: front IP50
Connector: screw terminal

ST 58 ...

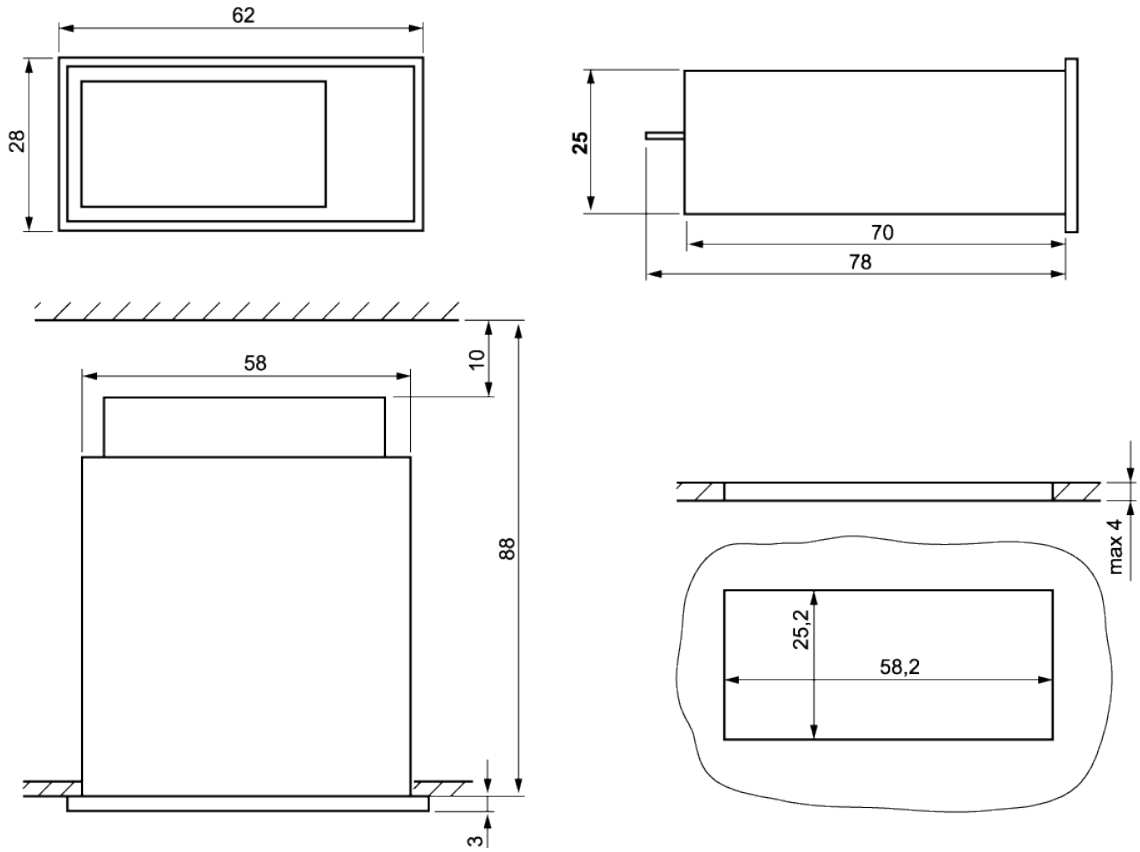

SOFTWARE .10

Description

UP key
By pressing this key the parameter or parameter value is increased.

DOWN key
By pressing this key the parameter or parameter value is increased.
The alarm buzzer can be cancelled by this key.

SET key
The display normally shows the actual value. When the SET key is pressed , the display changes to show the control setpoint.

First control level:

Adjusting the setpoint

Pressing the SET key, the setpoint S1 shows on the display.
If the setpoint is to be changed, the SET key is to be kept pressed while adjusting the setpoint with the keys UP and DOWN

Para-meter	Function	Adjustable Range	Standard setting	Customer setting
S1	Setpoint	P4...P5	0.0°C	

Second control level (P-Parameters):

Adjusting the control parameters
Simultaneously pressing the UP and DOWN key for at least 4 seconds opens a parameter list containing control parameters.
With the UP and DOWN keys the list can be scrolled in both directions.
Pressing the SET key will give you the value of the respective parameter. Pressing also the UP or DOWN key at the same time the value can be adjusted. Release the UP or DOWN button before releasing the SET button and the new value is saved into the non-volatile memory.
Return to the initial position takes place automatically, if no key is pressed for 60 seconds, or by simultaneously pressing the UP and DOWN key for approx. 4 seconds

Para-meter	Functions	Adjustable range	Standard Setting	Customer setting
P0	Display of actual value			
P2	Hysteresis K1	0.5 ... 99.9 °K	1.0 °K	
P4	Control range limitation – minimum setpoint	-99...P5	-99 °C	
P5	Control range limitation – maximum setpoint	P4...999 °C	999 °C	
P6	Actual Value Correction	-20.0 ... +20.0 °K	0.0 °K	
P19	Keyboard lock	0: not locked 1: locked	0	
P30	Lower alarm value	-99...999 °C	-99 °C	
P31	Upper alarm value	-99...999 °C	999 °C	
P32	Hysteresis alarm circuit (one-sided)	0.5 ... 99.9 °K	1.0 °K	
d0	Defrosting interval	1...99 hours 0: no defrosting	0	
d2	Defrosting temperature	-99.0 …999.0 °C	10.0 °C	
d3	Defrosting time limit	1…99 min 0: without time limit	30 min	

Parameter description second control level

P0: Actual value
The here indicated temperature presents the actual measured value. If the control setpoint is indicated by the help of parameter A32, the actual value can only be seen with this parameter.

P2: Hysteresis contact K1
The hysteresis can be set symmetrically or one-sided at the setpoint (see A40). At one-sided setting, the hysteresis works downward with heating contact and upward with cooling contact (see fig. 1 – 2).

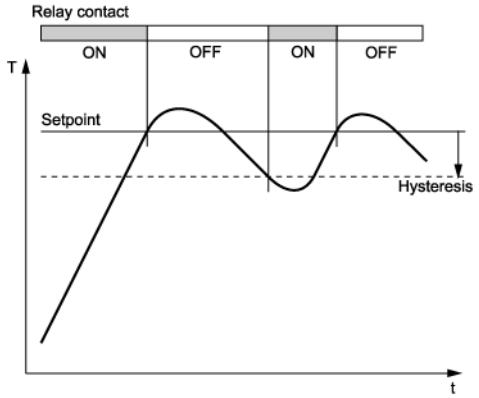

Fig. 1: Heating controller, one-sided hysteresis

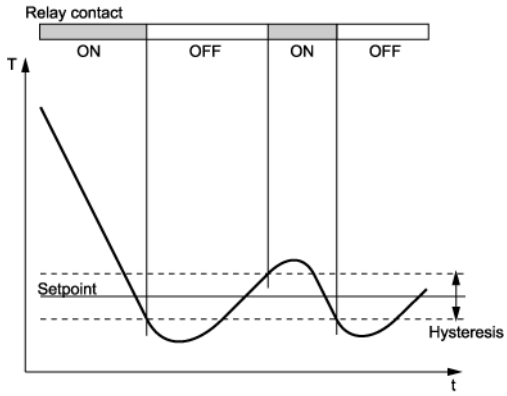

Fig. 2: Cooling controller, symmetrical hysteresis

P4: Control range limitation – minimum setpoint
P5: Control range limitation – maximum setpoint
The adjustment range of the setpoint can be limited in both directions. This is to prevent the end user of a unit from setting inadmissible or dangerous setpoints.

P6: Actual value correction
This parameter allows the correction of actual value deviations caused for example by sensor tolerances or extremely long sensor lines. The regulation measure value is increased or decreased by the here adjusted value.

P19: Key-lock
The key-lock allows blocking of the control keys. In locked condition parameter adjustments with keys is not possible. At the attempt to adjust the parameters despite key-lock the message "===" appears in the display.

P30: Lower alarm value
P31: Upper alarm value
The exit alarm is a boundary alarm or a range alarm with symmetrical hysteresis (see parameter P32). Both at the boundary alarm and the range alarm, limit values can be relative, i.e. going along with the setpoint, or absolute, i.e. independent of the setpoint. At boundary alarm the hysteresis works one-sided inwardly, and at range alarm outwardly.

Boundary alarm function (see fig. 3):
The alarm contact is closed if the process temperature is above the upper or below the lower boundary value.

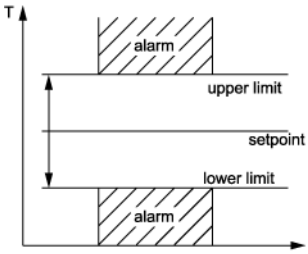

Fig. 3: Boundary alarm, rel. boundaries

Range alarm function (see fig. 4):
Opposite switching behaviour to the boundary value alarm. The alarm contact is closed if the actual value remains between the boundary values.

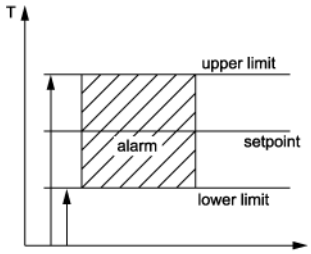

Fig. 4: Range alarm, abs. boundaries

P32: Hysteresis alarm circuit
Hysteresis is set one-sided at the adjusted limit value. It becomes effective depending on alarm definition.

d0: Defrosting interval
The "defrosting interval" defines the time, after which a defrosting process is started. After each defrosting start, this time is reset and runs the next interval.

d2: Defrosting temperature limit
This permits to terminate defrosting when the adjusted desired temperature value is reached. The defrosting time set with "d3" nevertheless runs at the same time, i.e. it functions as safety net to terminate the defrosting process in case the defrosting temperature is not reached.

d3: Defrosting time limit
After the here set time the defrosting process is terminated.

Third control level (A-level)
Access to the third control level is granted when selecting the last P-parameter on the second control level. Continue to press the UP key for approximately 10 seconds until “PA” appears. Continue to press the UP key and additionally press the DOWN key for about 4 seconds and the first A-parameter of the third control level is indicated.
With the keys UP and DOWN you can scroll the list in both directions. Pressing the SET key will give you the value of the respective parameter. By pressing the UP or DOWN key at the same time the value can be adjusted.
Return to the initial position takes place automatically, if no key is pressed for 60 seconds, or by simultaneously pressing the UP and DOWN key for approx. 4 seconds.

Para-meter	Functions	Adjustable Range	Standard Setting	Customer Setting
A1	Switch mode K1	0: heating contact 1: cooling contact 2: function alarm K1 3: function alarm K1 inverted	1	
A3	Function of contact K1 at sensor error	0: relay off 1: relay on	0	
A8	Display mode (all parameter indications are presented in 0.1°K)	0: integrals 1: decimals in 0.5°C 2: decimals in 0.1°C	1	
A19	Parameter lock	0: no lock 1: A-parameter locked 2: A- and P-parameter locked	0	
A30	Function alarm exit	0: boundary alarm, relative 1: boundary alarm, absolute 2: range alarm, relative 3: range alarm, absolute	0	
A31	Other alarm functions	0: without function 1: display flashing 2: buzzer active 3: display flashes and buzzer active	0	
A32	Setpoint display	0: display shows actual value 1: display shows setpoint S1 (S1‘)		
A40	Hysteresis mode contact K1	0: symmetrically 1: one-sided	1	
A50	Minimum action time contact K1 ”On”	0…999 sec.	0 sec.	
A51	Minimum action time contact K1 ”Off”	0…999 sec.	0 sec.	
A54	Time delay relay K1 after mains ON	0…999 sec.	0 sec.	
A56	Alarm suppression after mains ON	0…60 min	20 min.	
A60	Sensor type	11: PT100 2-wire 21: KTY81-121 2-wire 22: PT1000 2-wire	21	
A70	Software filter	1: inactive **average value with:** 1…128: 1..128 measuring values	8	
A80	Temperature scale	0: Fahrenheit 1: Celsius		1
Pro	Program version	-		-

Parameter description third control level

The following values can change the equipment characteristics and are therefore to be set with utmost care:

A1: Switch mode contact K1
The switch mode for the relay, i.e. cooling or heating function, can be programmed independently at works. Heating function means that the contact opens as soon as the setpoint is reached, thus power interruption. At cooling function, the contact closes, if the actual value is above the required setpoint.

A3: Function of contact K1 at sensor error
At sensor error the selected relay falls back into the condition pre-set here.

A8: Display mode
The value can be indicated in integrals or with decimals in 0.5°K or 0.1°K. At indication in 0.5°K the value is rounded up or down. In general, all parameter indications are presented in 0.1°K.

A19: Parameter lock
This parameter enables locking of each parameter level. If third level is locked, only parameter A19 may be changed.

A30: Function alarm exit
The alarm exit evaluates an upper and a lower limit value (see parameters P30 and P31), whereas a selection is possible as to whether the alarm is active if the temperature lies within these two limits, or whether the alarm is released if the temperature lies beyond them. In the case of sensor error, the alarm is activated independently of this adjustment. The exit can also be inverted with parameter A1, so that it functions like a release

A31: Other alarm functions
Here can be selected whether, in the case of an alarm, the indication to flash and/or the buzzer is to start. Sensor alarm (display F1L or F1H) is indicated independently thereof by flashing display and the buzzer.

A32: Setpoint display
A32=0 indicates the actual value, A32=1 statically indicates the setpoint in the display. Therefore, the current actual value can only be indicated with parameter P0.

A40: Hysteresis mode contact K1
This parameter allows selection as to whether the hysteresis value which is adjustable with P32, is set symmetrically or one-sided at the respective switching point. At symmetrical hysteresis, half of the hysteresis' value is effective below and half of the value above the switching point. The one-sided hysteresis works downward with heating contact and upward with cooling contact.

A50: Minimum action time contact K1 "On"
A51: Minimum action time contact K1 "Off"
These parameters permit a delay in switching on/off the relay in order to reduce the switching frequency. The adjusted time sets the entire minimum time period for a switching-on or switching-off phase.

A54: Delay after "Power-on"
This parameter allows a switching-on delay of relays after switching-on the mains voltage. This delay corresponds with the time set here.

A56: Alarm suppression after "Power-On"
This parameter allows a switching-on delay of the alarm contact after switching on the mains voltage or setpoint change-over. This delay corresponds with the time set here.

A60: Sensor type
These parameter permits selection of the sensor type, if the needed hardware prerequisites are available.

A70: Software filter
With several measuring values, it is possible to obtain an average value. This parameter can determine by how many measured values an average value is to be formed. If a sensor with a very fast reaction to external influences is used, an average value ensures a calm signal process.

A80: Temperature scale
Indication can be switched between Fahrenheit and Celsius. At conversion, the parameters and setpoints maintain their numerical value and adjustment range. (Example: A controller with the desired value of 0°C is switched to Fahrenheit. The new desired value is then interpreted as 0°F, which corresponds to a temperature of -18°C).
NOTE: Indication limits with °F can be smaller than the actual measuring range!

Error codes

Display	error	What to do
F1L	sensor short circuit	new sensor
F1H	sensor failure	new sensor
F3L	Boundary alarm	Temperature low
F3H	Boundary alarm	Temperature high
F3	Range alarm	Temperature in between boundaries
---	Keyboard lock active	see Parameter P19 or A19
display flashing, buzzer	Temperature alarm (see A31)	cancel buzzer with ∇ button
EP	lost of data in EE-Prom	repair of controller

Technical data of ST58-GB1TB.10

Measuring input

F1: Resistance sensor PTC (KTY 81-121) or Pt100 / Pt1000

Measuring range	PTC	-50...150°C
	Pt100 / Pt1000	-99...550°C

Measuring accuracy: +/- 1K or +/- 0.5% of measuring range

Display

One 3-digit LED Display, height 7mm, colour red
One LED

Outputs

K1: Relay, 16(2.2) A 250V, change-over contact
permanent current max. 12(2.2) A, limited by connectors and/or conductive strips

Power supply

115V, 50Hz / 60Hz, max. 20mA

Ambient conditions:

Storage temperature	-20°C...+70°C
Operating temperature	0...55°C
Relative humidity	max. 75%, without dew

Weight

ca. 140g, without sensor

Connectors

screw terminal for cable up to 1.5 mm²

Enclosure

IP50

Installation data

Unit is to be installed in an instrument panel.

Front size:	62mm x 28mm
Panel cut-out:	58.2mm x 25.2mm
Installation depth:	ca. 80mm